WISHA Department of Labor & Industries

PORTABLE POWER TOOLS

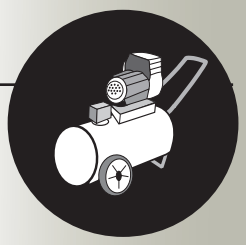

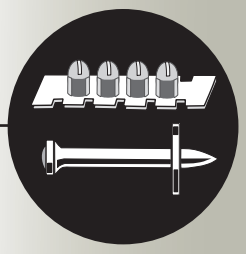

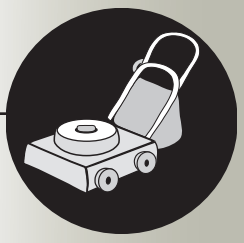

Chapter 296-807 WAC

July 2003 Edition

Washington Industrial Safety & Health Act

F414-089-000

07/2003 printing

Department of LABOR AND INDUSTRIES

Standards Update to

Chapter 296-807 WAC, Portable Power Tools

Issue Date 7/2003
Effective Date 8/1/2003

The Department of Labor and Industries has rewritten and reorganized for clarity and ease of use the safety standards for portable power tools. The portable power tools rules, in chapter 296-24 WAC, Part H-1, were rewritten and adopted as chapter 296-807 WAC. **Please discard WAC 296-24-650 through WAC 296-24-67005.**

To receive future updates of this standard and all other Department of Labor and Industries safety and health standards electronically, please sign up on the WISHA Listserv (http://www.lni.wa.gov/wisha/). By subscribing to the Listserv, you will also receive rule updates, hearing notices, and informational packets for all safety and health rules.

Also available on the WISHA web site:

- WISHA Core Rules
- Other General WISHA Rules
- Industry and Task-specific Rules
- Proposed rules and hearings
- Newly adopted rules and new rule information
- WISHA Regional Directives (WRDs)
- WISHA Interim Operations and Interpretive Memoranda (WIIM)
- Memoranda of Understanding (MOU)

To receive hardcopy updates of this rule, please return the card located at the back of the book.

Other Rules that may apply to your workplace

- The WISHA Safety and Health Core Rules, Chapter 296-800 WAC, contain the basic requirements that apply to most employers in Washington. They also contain:
  - An Introduction that lists important information you should know, including a section on building, fire and electrical codes.
  - A Resource section that includes a complete list of all WISHA rules and a directory of the Labor and Industries (L&I) offices.
- Other WISHA rules may apply to you, depending on the activities and operations of your workplace. Contact your local L&I office if you're uncertain about which WISHA requirements apply to you.
- To go online to access all the Safety and Health Rules: http://www.lni.wa.gov/wisha
- If you would like to receive e-mail notification of rule updates, please register for the Standards Listserv on the WISHA web site at http://www.lni.wa.gov/home/listservs.htm
- For a CD or paper copy contact us by:

Mail: Department of Labor and Industries
P.O. Box 44620
Olympia, WA 98504-4620

Telephone: 1-800-4BE-SAFE (1-800-423-7233)

Portable Power Tools

Chapter 296-807 WAC

Quick Reference

WAC Number	Title of Rule	Page
296-807-100	Scope	100-1
296-807-110	Switches (Controls)	110-1
296-807-120	Portable Circular Saws	120-1
296-807-130	Portable Belt Sandiing Machines	130-1
296-807-140	Compressed Air Tools	140-1
296-807-150	Powder Actuated Fastening Systems	150-1
296-807-160	Power Lawnmowers	160-1
296-807-170	Jacks	170-1
296-807-180	Portable Tools Using Abrasive Wheels	180-1
296-807-190	Definitions	190-1
	Resources	R-1
	Index	IN-1
	Statutory Authority	SA-1

1•800•4BE SAFE (1•800•423•7233)

Portable Power Tools

Chapter 296-807 WAC

Contents

296-807-100 Scope 100-1

296-807-110 Switches (Controls) 110-1
296-807-11005 Make sure switches are safe 110-2

296-807-120 Portable Circular Saws 120-1
296-807-12005 Make sure portable circular saws are safe 120-2

296-807-130 Portable Belt Sanding Machines 130-1
296-807-13005 Guard portable belt sanding machines 130-2

296-807-140 Compressed Air Tools 140-1

GENERAL TOOL REQUIREMENTS
296-807-14005 Follow the manufacturer's instructions 140-3
296-807-14010 Prevent air tools from ejecting attachments 140-3

CONTACT WITH COMPRESSED AIR
296-807-14015 Protect employees from contact with compressed air 140-3

CLEANING
296-807-14020 Make sure safeguards are used when cleaning with compressed air 140-4

AIRHOSE AND PLASTIC PIPE
296-807-14025 Make sure airhose and plastic pipe supplying compressed air to portable air tools are safe 140-5

-Continued-

Portable Power Tools

Chapter 296-807 WAC

Contents

TOOL DESIGN AND CONSTRUCTION

296-807-14030 Make sure air tools are adequately designed and constructed 140-6

TOOL USE

296-807-14035 Use air tools safely 140-7

FASTENER DRIVING TOOLS

296-807-14040 Make sure fastener driving air tools (nailers and staplers) are safe 140-8

296-807-150 Powder Actuated Fastening Systems ... 150-1

TOOL OPERATORS

296-807-15005 Make sure operators are qualified 150-4

PERSONAL PROTECTIVE EQUIPMENT

296-807-15010 Make sure employees are aware tools are in use and wear appropriate personal protective equipment (PPE) 150-5

TOOL DESIGN AND CONSTRUCTION

296-807-15015 Make sure tools are adequately designed and constructed 150-6

LABELING

296-807-15020 Make sure tools and containers are properly labeled 150-7

-Continued-

Contents

POWDER LOADS
296-807-15025 Make sure powder loads and power levels are properly identified 150-8
296-807-15030 Use proper powder loads 150-9

TOOL USE
296-807-15035 Make sure the tool is appropriate to the job 150-9
296-807-15040 Make sure the operator uses the tool safely 150-10

FASTENERS
296-807-15045 Use fasteners safely 150-11

INSPECTION AND MAINTENANCE
296-807-15050 Inspect and maintain tools properly 150-13

STORAGE
296-807-15055 Make sure tools are stored properly 150-14

296-807-160 Power Lawnmowers 160-1

DESIGN AND CONSTRUCTION
296-807-16005 Make sure equipment meet minimum design and construction requirements 160-3

LABELS
296-807-16010 Make sure the equipment has the appropriate labels and decals 160-4

BEFORE STARTING
296-807-16015 Make sure the operator understands and follows instructions before starting mower 160-5

-Continued-

Portable Power Tools

Chapter 296-807 WAC

Contents

USE

296-807-16020 Use the equipment safely 160-6

NONELECTRIC MOTORS

296-807-16025 Protect employees from fuel and exhaust 160-7

WALK-BEHIND MOWERS

296-807-16030 Use walk-behind mowers safely 160-8

RIDE-ON MOWERS

296-807-16035 Use ride-on mowers safely 160-8

296-807-170 Jacks 170-1

LABELING

296-807-17005 Make sure jacks are labeled with their rated load(s) 170-2

BEFORE USE

296-807-17010 Make sure the jack is safe to lift the load 170-2

LIFTING THE LOAD

296-807-17015 Lift the load safely 170-3

INSPECTION AND MAINTENANCE

296-807-17020 Visually inspect jacks and keep them in good working order 170-4

-Continued-

Contents

296-807-180 Portable Tools Using Abrasive Wheels.. 180-1

DESIGN AND CONSTRUCTION
296-807-18005 Make sure abrasive wheels and tools are properly designed and constructed 180-4

GUARDS
296-807-18010 Make sure machines have safety guards 180-5
296-807-18015 Keep safety guards in good functional condition..... 180-6

GUARDS-SPECIFIC WHEELS
296-807-18020 Use specific safety guards for machines using Type 1 grinding wheels, cutting-off wheels, and tuck pointing wheels..... 180-7
296-807-18025 Use specific safety guards for vertical and angle grinders using Type 6 or Type 11 wheels 180-7
296-807-18030 Use specific safety guards for vertical and angle grinders using Type 27, 28 and 29 wheels..... 180-8

SIDE HANDLES
296-807-18035 Use side handles on vertical and angle grinders..... 180-8

ABRASIVE WHEELS
296-807-18040 Make sure abrasive wheels are safe to use..... 180-9

MOUNTING
296-807-18045 Mount wheels properly..... 180-10

FLANGES
296-807-18050 Use proper flanges 180-11
296-807-18055 Make sure flanges are in good condition 180-13

-Continued-

Portable Power Tools

Chapter 296-807 WAC

Contents

FLANGES-SPECIFIC WHEELS

296-807-18060 Use specific flanges for Type 1 cutting-off wheels 180-14

296-807-18065 Use specific flanges for Type 27A cutting-off wheels 180-14

296-807-18070 Use specific flanges for threaded hole wheels 180-15

296-807-18075 Use specific flanges for cup, cone or plug wheels with threaded inserts or projecting studs 180-15

BLOTTERS

296-807-18080 Use blotters when required 180-16

PLOTTERS-TYPE 6 AND 11 WHEELS

296-807-18085 Meet specific blotter requirements when using modified Typed 6 and 11 wheels (terrazzo) 180-17

296-807-190 Definitions 190-1

Resources R-1

HELPFUL TOOLS

Center punch test R-3

Ring test R-5

Abrasive wheel illustrations R-8

Index IN-1

Statutory Authority SA-1

Scope

This chapter applies to the tools and equipment shown in Table 1, Scope of this chapter.

Table 1
Scope of this Chapter

Section	Applies to
110 - Switches (controls)	Hand-held portable power tools
120 - Portable circular saws	Hand-held portable circular saws
130 - Portable belt sanding machines	Hand-held portable belt sanding machines
140 - Compressed air tools, hose, and pipe	Hand-held portable compressed air powered tools. It also applies to airhose and plastic pipe used to supply compressed air to these tools.
150 - Powder actuating fastening systems	Powder actuated fastening systems designed to use the expanding gases from a powder load to propel a stud, pin, fastener, or other object into hard structural material.
160 - Power lawnmowers	Consumer and commercial power lawnmowers.
170 - Jacks	Portable hand-or power-operated: • Hydraulic jacks • Mechanical ratchet jacks • Mechanical screw jacks
180 - Portable tools using abrasive wheels	Portable tools using abrasive wheels

Notes

Switches (Controls)

WAC 296-807-110

Summary

YOUR RESPONSIBILITY:

Make sure hand-held portable power tools have safe switches (controls)

Exemption:

WAC 296-807-110 doesn't apply to:

- Concrete vibrators
- Concrete breakers
- Powered tampers
- Jack hammers
- Rock drills
- Garden appliances
- Household and kitchen appliances
- Personal care appliances
- Medical or dental equipment
- Fixed machinery.

You must

Make sure switches are safe
WAC 296-807-11005 110-2

Rule

WAC 296-807-11005

Make sure switches are safe

You must

(1) Make sure the operating switch is located in a position that makes it difficult to accidentally operate the tool.

(2) Use the correct operating switch.

- Make sure hand-held gasoline-powered chain saws have a constant pressure throttle control that will shut off power to the chain when the pressure is released.
- Use a constant pressure switch that will shut off the power when the switch is released to turn on or operate any hand-held power tool.

Exemptions:

➢ Some tools can use a lock-on feature with the constant pressure switch if the lock-on feature can be turned off with a single motion of the same finger(s) that turned it on. You can use a lock-on feature with these hand-held tools:

- Drills
- Tappers
- Fastener drivers
- Grinders using a wheel greater than 2 inches in diameter
- Disc sanders
- Belt sanders
- Reciprocating saws
- Saber, scroll and jig saws using a blade with a shank width greater than 1/4 inch
- Other similarly operating powered tools.

- Continued -

WAC 296-807-11005 (Continued)

Exemptions:

- You can use a positive "on-off" switch with these hand-held tools:
  - Platen sanders
  - Grinders using a wheel 2 inches or less in diameter
  - Routers
  - Planers
  - Laminate trimmers
  - Nibblers
  - Shears
  - Saber, scroll and jig saws using a blade with a shank width of 1/4 inch (± .05 inch) or less.

Note:

The shank width of saber, scroll and jig saw blades is measured at the narrowest point on the blade shank.

Notes

Portable Circular Saws

WAC 296-807-120

Summary

YOUR RESPONSIBILITY:

Make sure circular saws are safe

You must

Make sure portable circular saws are safe to use
WAC 296-807-12005 120-2

Portable Circular Saws

WAC 296-807-120

Rule

WAC 296-807-12005

Make sure portable circular saws are safe to use

You must

(1) Use a constant pressure switch to turn on or operate any circular saw using a blade that has a diameter greater than 2 inches.

(2) Remove cracked saws and saw blades from service.

(3) Make sure power driven circular saws that have a blade diameter larger than 2 inches have guards above and below the base plate (shoe) as listed in Table 2, Portable circular saw guarding requirements.

Table 2
Portable Circular Saw Guarding Requirements

Upper Guard	Lower Guard
Covers the blade to the depth of the teeth, except for the minimum arc necessary to allow the base to tilt for bevel cuts.	Covers the blade to the depth of the teeth, except for the minimum arc necessary to allow proper: • Retraction of the guard • Contact with the work. Automatically and instantly returns to the position covering the blade when the saw is withdrawn from contact with the work.

Exemption:

Guarding requirements in subsection (3) of this section don't apply to saws used in the meat cutting industry to cut meat.

Portable Belt Sanding Machines

WAC 296-807-130

Summary

YOUR RESPONSIBILITY:

Make sure portable belt sanding machines are safe

You must

Guard portable belt sanding machines
WAC 296-807-13005 130-2

Portable Belt Sanding Machines

WAC 296-807-130

Rule

WAC 296-807-13005

Guard portable belt sanding machines

You must

- Guard:
  - Nip points where the sanding belt runs onto a pulley
  - The unused run of the sanding belt.

Compressed Air Tools

WAC 296-807-140

Summary

YOUR RESPONSIBILITY:

Make sure compressed air and compressed air tools are used safely

This section applies to portable, hand-held compressed air powered tools. It also applies to airhose and plastic pipe used to supply compressed air to these tools.

You must

GENERAL TOOL REQUIREMENTS

Follow the manufacturer's instructions
WAC 296-807-14005 140-3

Prevent air tools from ejecting attachments
WAC 296-807-14010 140-3

CONTACT WITH COMPRESSED AIR

Protect employees from contact with compressed air
WAC 296-807-14015 140-3

CLEANING

Make sure safeguards are used when cleaning with compressed air
WAC 296-807-14020 140-4

AIRHOSE AND PLASTIC PIPE

Make sure airhose and plastic pipe supplying compressed air to portable air tools are safe
WAC 296-807-14025 140-5

- Continued -

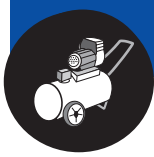

Summary

WAC 296-807-140 (Continued)

TOOL DESIGN AND CONSTRUCTION

Make sure air tools are adequately designed and constructed
WAC 296-807-14030 140-6

TOOL USE

Use air tools safely
WAC 296-807-14035 140-7

FASTENER DRIVING TOOLS

Make sure fastener driving air tools (nailers and staplers) are safe
WAC 296-807-14040. 140-8

GENERAL TOOL REQUIREMENTS

WAC 296-807-14005
Follow the manufacturer's instructions

You must

- Follow the manufacturer's instructions for safe use of the tool.

WAC 296-807-14010
Prevent air tools from ejecting attachments

You must

- • Make sure the tool can't accidentally eject an attachment.

Note:

A retainer is needed if the tool doesn't have a positive method of keeping the attachment in the tool.

CONTACT WITH COMPRESSED AIR

WAC 296-807-14015
Protect employees from contact with compressed air

You must

- Make sure a tool nozzle or an airhose opening isn't:
  - Pointed at anyone
  - Allowed to contact a person's body.

Rule

CLEANING

WAC 296-807-14020

Make sure safeguards are used when cleaning with compressed air

You must

- Use the following when cleaning with compressed air:
  - Air pressure that has been reduced to less than 30 p.s.i. static pressure at the nozzle
  - Effective chip guarding.

Note:

➢ You may use air pressure greater than 30 p.s.i. if you use a nozzle with vents, holes, flaps or slots that will direct the air flow away from the tip of the nozzle and will reduce the air flow to less than 30 p.s.i if the nozzle becomes blocked.

➢ Effective chip guarding means any method or equipment that protects the eyes and skin of the cleaner and other workers from flying chips or particles. Examples include:
  - A protective cone around the nozzle to protect the cleaner
  - Barriers, baffles or screens to protect other workers.

Reference:

Appropriate personal protective equipment (PPE) needs to be worn when cleaning with compressed air. See WAC 296-800-160 in the Safety and Health Core Rules.

AIRHOSE AND PLASTIC PIPE

WAC 296-807-14025

Make sure airhose and plastic pipe supplying compressed air to portable air tools are safe

You must

(1) Make sure the airhose and hose connections are suitable for the:

- Air pressure
- Use.

(2) Make sure any plastic pipe used to supply compressed air for portable air tools has been specifically identified by the manufacturer as being suitable for compressed air use.

Note:

Existing unapproved pipe that is buried underground or enclosed in shatter-resistant material is acceptable only if it completely eliminates the hazards created by the brittle nature of the pipe.

Compressed Air Tools

WAC 296-807-140

Rule

TOOL DESIGN AND CONSTRUCTION

WAC 296-807-14030

Make sure air tools are adequately designed and constructed

Exemption:

This section doesn't apply to:

- Tools specifically for medical or dental use
- Tools specifically for use in the food processing industry
- Tools mounted in stationary installations
- Air hoists
- Construction and mining tools such as paving breakers, diggers, tampers, and rock drills.

You must

- Make sure portable, hand-held air tools meet the requirements of:
  - ANSI B186.1-1984, Safety Code for Portable Air Tools.

    OR
  - ANSI/ISANTA SNT-101-1993, Portable, Compressed-Air-Actuated, Fastener Driving Tools-Safety Requirements for.

Note:

There may be a statement on the tool or in the instruction manual indicating the tool meets the requirements of the appropriate ANSI standard. If in doubt, check with the manufacturer.

TOOL USE

WAC 296-807-14035
Use air tools safely

Exemption:

This section doesn't apply to:

- Tools specifically for medical or dental use
- Tools specifically for use in the food processing industry
- Tools mounted in stationary installations
- Air hoists
- Construction and mining tools such as paving breakers, diggers, tampers, and rock drills.

You must

(1) Relieve the pressure in the air line before disconnecting a compressed air tool from the line or disconnecting a hose joint unless there is automatic valve closing protection at the joint being separated.

(2) Disconnect the tool from the compressed air supply before repairs are done.

(3) Make sure that eye protection is worn at all times by:

- The person operating the tool
- Other persons in the area where tools are being used.

References:

- Use the PPE hazard assessment to determine which employees other than the tool operator need to wear eye protection and the type of eye protection they need to wear. See WAC 296-800-160 in the Safety and Health Core Rules.
- Chapter 296-62 WAC, Part K, Hearing Conservation, may require the use of hearing protection.

Rule

FASTENER DRIVING TOOLS

WAC 296-807-14040

Make sure fastener driving air tools (nailers and staplers) are safe

You must

(1) Make sure any fastener driving air tool discharges all air in the tool when disconnected from the compressed air supply.

(2) Make sure that all pneumatically driven nailers, staplers, and other similar equipment provided with automatic fastener feed have a safety device on the muzzle to prevent the tool from ejecting fasteners, unless the muzzle is in contact with the work surface.

Note:

Pneumatic nailers or staplers don't need this safety device if:

- The overall weight of the fastening device doesn't exceed the weight of 1-1/2 inches of standard 18-gauge wire. The normal maximum diameter tolerance for manufacturing standard 18-gauge wire is .045 inches.
- The operator and any other person within 12 feet of the point of operation wear approved eye protection.

Powder Actuated Fastening Systems

WAC 296-807-150

Summary

YOUR RESPONSIBILITY:

Make sure powder actuated fastening systems are used safely

Important:

This section applies to any powder actuated fastening system designed to use the expanding gases from a powder load to propel a stud, pin, fastener, or other object into hard structural material.

Exemption:

This section doesn't apply to:

- Devices designed to attach objects to soft construction material such as wood, plaster, tar, and dry wallboard
- Stud welding equipment.

You must

TOOL OPERATORS

Make sure tool operators are qualified
WAC 296-807-15005 150-4

PERSONAL PROTECTIVE EQUIPMENT

Make sure employees are aware tools are in use and wear appropriate personal protective equipment (PPE)
WAC 296-807-15010 150-5

- Continued -

Summary

WAC 296-807-150 (Continued)

TOOL DESIGN AND CONSTRUCTION

Make sure tools are adequately designed and constructed
WAC 296-807-15015 150-6

LABELING

Make sure tools and containers are properly labeled
WAC 296-807-15020 150-7

POWDER LOADS

Make sure powder loads and power levels are properly identified
WAC 296-807-15025 150-8

Use proper powder loads
WAC 296-807-15030 150-9

TOOL USE

Make sure the tool is appropriate to the job
WAC 296-807-15035 150-9

Make sure the operator uses the tool safely
WAC 296-807-15040 150-10

FASTENERS

Use fasteners safely
WAC 296-807-15045 150-11

- Continued -

WAC 296-807-150 (Continued)

INSPECTION AND MAINTENANCE

Inspect and maintain tools properly
WAC 296-807-15050 150-13

STORAGE

Make sure tools are stored properly
WAC 296-807-15055 150-14

Rule

TOOL OPERATORS

WAC 296-807-15005

Make sure tool operators are qualified

You must

- Make sure tools are used only by qualified operators
- Make sure operators have been trained by an authorized instructor.

Note:

Authorized instructors have to meet the instructor qualifications of ANSI A10.3-1995, Safety Requirements for Powder-Actuated Fastening Systems.

You must

- Make sure all tool operators can:
  - Understand the manufacturer's instructions
  - Clean the tool properly
  - Recognize any visibly worn or damaged parts
  - Identify power load levels
  - Operate the tool correctly.
- Make sure tool operators have a valid qualified operator's card in their possession when they are using the tool.

PERSONAL PROTECTIVE EQUIPMENT

WAC 296-807-15010

Make sure employees are aware tools are in use and wear appropriate personal protective equipment (PPE)

You must

(1) Make sure eye or face protection is worn by:

- Tool operators
- Assistants
- Persons close to where the tool is being used.

Reference:

- Use the PPE hazard assessment to determine which employees other than the tool operator need to wear eye protection and the type of eye protection they need to wear. See WAC 296-800-160 in the Safety and Health Core Rules.
- Chapter 296-62 WAC, Part K, Hearing Conservation, may require the use of hearing protection.

You must

(2) Post signs where tools are being used and in adjacent areas where tool use could pose a hazard. Signs must:

- Be easily seen
- Be at least 8 x 10 inches (20 x 25 cm)
- Use letters in boldface type at least one inch (2.5 cm) high
- Read “zp§=F•˜"4›¤"›F=˜›ppd˜am˜¤ÐF similar wording.

Note:

Tool use could create a hazard in adjacent areas by allowing a fastener to penetrate one or more of the following:

- Wall
- Floor
- Other working surface.

Rule

TOOL DESIGN AND CONSTRUCTION

WAC 296-807-15015

Make sure tools are adequately designed and constructed

You must

(1) Make sure the tool meets the design and construction requirements of the American National Standards Institute (ANSI) standard, ANSI A10.3-1995, Safety Requirements for Powder-Actuated Fastening Systems.

Note:

There may be a statement on the tool or in the instruction manual indicating the tool meets the requirements of the appropriate ANSI standard. If in doubt, check with the manufacturer.

You must

(2) Make sure each tool has:

- Operator instructions and a tool service manual
- Powder load and fastener chart
- Service tools and accessories.

LABELING

WAC 296-807-15020
Make sure tools and containers are properly labeled

You must

(1) Make sure tools are properly labeled.

- Make sure each tool has a readable, permanent label that shows the manufacturer's:
  - Model number
  - Unique serial number.
- Make sure there is a durable warning label on each tool that:
  - Reads "WARNING - FOR USE ONLY BY QUALIFIED OPERATORS ACORDING TO MANUFACTURER'S INSTRUCTION MANUAL"

    OR
  - Uses words with the same meaning.

(2) Make sure the tool storage container has these labels:

- "POWDER ACTUATED TOOL" on the outside of the container in an easily seen position
- "WARNING - POWDER ACTUATED TOOL. TO BE USED ONLY BY A QUALIFIED OPERATOR AND KEPT UNDER LOCK AND KEY WHEN NOT IN USE‡õn the inside cover.

POWDER LOADS

WAC 296-807-15025

Make sure powder loads and power levels are properly identified

You must

- Make sure powder loads and power levels are identified as specified in Table 3, Powder-Load Identification.

Table 3
Powder-Load Identification

	Power level	Color Identification	
		Case Color	Load Color
Lowest level	1	Brass	Gray
	2	Brass	Brown
	3	Brass	Green
	4	Brass	Yellow
	5	Brass	Red
	6	Brass	Purple
	7	Nickel	Gray
	8	Nickel	Brown
	9	Nickel	Green
	10	Nickel	Yellow
	11	Nickel	Red
Highest Level	12	Nickel	Purple

WAC 296-807-15030
Use proper powder loads

You must

- Use only a powder load that is:
  - Recommended by the tool manufacturer for the particular tool

    OR
  - One that provides the same level of safety and performance.

TOOL USE

WAC 296-807-15035
Make sure the tool is appropriate to the job

You must

(1) Use the lowest velocity class of tool and load that will properly set the fastener.

(2) Use the proper shield, fixture, adaptor, or accessory that is:

- Suitable for the job
- Recommended and supplied by the manufacturer.

Rule

WAC 296-807-15040

Make sure the operator uses the tool safely

You must

(1) Make sure the operator:

- Inspects the tool before using it, as recommended by the tool manufacturer
- Uses the tool according to the manufacturer's instructions
- Keeps the tool unloaded until just before using it
- Unloads the tool at once if work is interrupted after the tool has been loaded
- Doesn't leave a tool or powder load unattended where it would be available to an unauthorized person
- Never points a tool (loaded or unloaded) at any part of a person's body.

Note:

A magazine or clip fed tool isn't considered loaded until a powder load is actually in the ram (firing chamber).

You must

(2) Make sure tools aren't used in an explosive or flammable atmosphere.

(3) Do this if the tool misfires:

- Hold it firmly against the work surface for 30 seconds

  THEN

- Follow the instructions in the tool manufacturer's instruction manual.

(4) Hold the tool perpendicular to the work surface when fastening to any material.

Exemption:

This doesn't apply if the tool manufacturer recommends a different technique for a specific job.

FASTENERS

WAC 296-807-15045
Use fasteners safely

You must

(1) Use fasteners:

- Recommended by the tool manufacturer for the particular tool

  OR

- Fasteners that provide the same level of safety and performance.

(2) Keep the fastener from passing completely through the structural material by using a backing material when driving a fastener into any material that is any of the following:

- Easily penetrated
- Thin
- Of questionable resistance.

(3) Make sure the material is suitable for fastening. Don't drive fasteners into very hard or brittle material such as:

- Cast iron
- Glazed tile
- Hardened steel
- Glass block
- Natural rock
- Hollow tile
- Most brick.

- Continued -

Rule

WAC 296-807-15045 (Continued)

You must

(4) Make sure positive alignment with an existing hole is maintained by using a guide or other means supplied or recommended by the tool manufacturer before driving a fastener into the hole.

Helpful Tool:

Center Punch Test

A center punch test will help you determine if the material is suitable.
You can find a copy of this form in the Resources section of this chapter.

You must

(5) Make sure fasteners aren't driven into any spalled (chipped or crumbled) area.

(6) Drive fasteners into concrete only if the fastener shank will penetrate no more than 1/3 the thickness of the concrete.

(7) Make sure fasteners are driven at least:

- 1/2 inch (13 mm) from the edge of steel
- 3 inches (75 mm) from the unsupported edge of masonry material.

Exemption:

This doesn't apply if an application is specifically required or recommended by the tool manufacturer.

INSPECTION AND MAINTENANCE

WAC 296-807-15050
Inspect and maintain tools properly

You must

- Make sure any tool that isn't in proper working condition is:
  - Immediately removed from service
  - Tagged
  - Properly repaired as specified in the manufacturer's instructions before being used again.
- Regularly service the tool and inspect it for worn or damaged parts at intervals recommended by the tool manufacturer.
- Replace worn or damaged parts before the tool is used. This must be done:
  - By a qualified person
  - Using only parts supplied by the tool manufacturer.
- Keep a written record of inspection dates.

Rule

STORAGE

WAC 296-807-15055

Make sure tools are stored properly

You must

(1) Make sure there is a container that can be locked for each tool.

(2) Make sure tools and powder loads that aren't being used are:

- Locked in a container
- Stored in a safe place
- Only available to authorized persons.

(3) Store all manuals, maintenance tools, and accessories in the tool container when they aren't being used.

Power Lawnmowers

WAC 296-807-160

Summary

YOUR RESPONSIBILITY:

Make sure power lawnmowers are used safely

Exemption:

This section doesn't apply to commercial equipment that is:

- Designed primarily for agricultural purposes

  OR

- Designed primarily to be operated with tractors having at least 20 horsepower for cutting grass or other growth on highways.

You must

DESIGN AND CONSTRUCTION

Make sure equipment meets minimum design and construction requirements
WAC 296-807-16005 160-3

LABELS

Make sure the equipment has the appropriate labels and decals
WAC 296-807-16010 160-4

BEFORE STARTING

Make sure the operator understands and follows instructions before starting the mower
WAC 296-807-16015 160-5

- Continued -

Power Lawnmowers

WAC 296-807-160

Summary

WAC 296-807-160 (Continued)

USE

Use the equipment safely
WAC 296-807-16020 160-6

NONELECTRIC MOWERS

Protect employees from fuel and exhaust
WAC 296-807-16025 160-7

WALK-BEHIND MOWERS

Use walk-behind mowers safely
WAC 296-807-16030 160-8

RIDE-ON MOWERS

Use ride-on mowers safely
WAC 296-807-16035 160-8

DESIGN AND CONSTRUCTION

WAC 296-807-16005

Make sure equipment meets minimum design and construction requirements

You must

(1) Make sure equipment meets ANSI design and construction requirements.

- Make sure power lawnmowers manufactured on or after August 1, 2003, meet the requirements of the appropriate ANSI standard:
  - ANSI B71.1-1998, American National Standard for Consumer Turf Care Equipment - Walk-Behind Mowers and Ride-On Machines with Mowers - Safety Specifications

    OR
  - ANSI B71.4-1999, American National Standard for Commercial Turf Care Equipment - Safety Specifications.
- Make sure noncommercial power lawnmowers manufactured before the effective date of this chapter meet the requirements in chapter 296-806 WAC, Machine safety.

Note:

There may be a statement on the tool or in the instruction manual indicating the tool meets the requirements of the appropriate ANSI standard. If in doubt, check with the manufacturer.

- Continued -

Power Lawnmowers

WAC 296-807-160

Rule

WAC 296-807-16005 (Continued)

You must

(2) Position, guard or shield all power-driven shafts, chains, belts, gears, friction drive components, nip and pinch points, and any exposed components hot enough to cause burns while:

- Starting
- Mounting
- Operating the machine.

(3) Have a shutoff device that:

- Will stop the motor or engine

  AND

- Has to be intentionally and manually activated before the motor or engine can be restarted.

LABELS

WAC 296-807-16010

Make sure the equipment has the appropriate labels and decals

You must

(1) Make sure all positions of the operating controls are clearly identified.

(2) Make sure warning and caution labels or decals on the mower are readable and replace them if necessary.

BEFORE STARTING

WAC 296-807-16015

Make sure the operator understands and follows instructions before starting the mower

You must

(1) Make sure the operator understands all instructions for operating the mower that are in the manufacturer's instructions and on the machine.

- Make sure the operator is thoroughly familiar with the controls and proper use of the mower before starting it.

(2) Make sure the proper guards, plates, grass catcher or other safety devices are in place before starting the mower.

Power Lawnmowers

WAC 296-807-160

Rule

USE

WAC 296-807-16020

Use the equipment safely

You must

(1) Follow the manufacturer's instructions for safe use of the equipment.

(2) Keep people clear of discharge opening(s).

(3) Keep people's hands and feet clear of rotating parts.

(4) Clear the area of objects such as rocks, toys, wire, bones, sticks, etc., which could be picked up and thrown by the blade and create a hazard for the operator or other persons.

(5) Make sure the operator stops the engine before:

- Leaving the equipment
- Unclogging the grass discharge chute
- Cleaning the mower.

(6) Make sure the operator wears safety goggles or safety glasses with side shields when operating the mower.

Note:

Use the personal protective equipment (PPE) hazard assessment to determine the type of footwear and other PPE the employees need to wear. See WAC 296-800-160, PPE, in the Safety and Health Core Rules.

NONELECTRIC MOWERS

WAC 296-807-16025

Protect employees from fuel and exhaust

Exemption:

This section doesn't apply to electric engines.

You must

(1) Make sure to:

- Keep the gas cap on whenever the engine is running.
- Shut off the engine before and during refueling.

(2) Make sure not to refuel the machine indoors.

(3) Make sure not to run the engine in a closed area.

Exemption:

You can refuel the machine indoors or run the engine in a closed area if the area was specifically designed for such use.

Power Lawnmowers

WAC 296-807-160

Rule

WALK-BEHIND MOWERS

WAC 296-807-16030

Use walk-behind mowers safely

You must

(1) Make sure the operator wears substantial footwear when operating a walk-behind mower.

Note:

Use the personal protective equipment (PPE) hazard assessment to determine the type of footwear and other PPE the employees need to wear. See WAC 296-800-160, PPE, in the Safety and Health Core Rules.

You must

(2) Mow across the face of a slope.

RIDE-ON MOWERS

WAC 296-807-16035

Use ride-on mowers safely

You must

(1) Make sure not to carry passengers.

(2) Make sure the operator looks down and behind before and while moving backwards.

Summary

YOUR RESPONSIBILITY:

Make sure jacks are safe to use

Important:

This section applies to portable hand- or power-operated:

- Hydraulic jacks
- Mechanical ratchet jacks
- Mechanical screw jacks.

You must

LABELING

Make sure jacks are labeled with their rated load(s)
WAC 296-807-17005 170-2

BEFORE USE

Make sure the jack is safe to lift the load
WAC 296-807-17010 170-2

LIFTING THE LOAD

Lift the load safely
WAC 296-807-17015 170-3

INSPECTION AND MAINTENANCE

Visually inspect jacks and keep them in good working order
WAC 296-807-17020. 170-4

Jacks

WAC 296-807-170

Rule

LABELING

WAC 296-807-17005

Make sure jacks are labeled with their rated load(s)

You must

- Make sure the rated load(s) of the jack is:
  - Readable
  - Durably marked in an easily seen location on the jack.

BEFORE USE

WAC 296-807-17010

Make sure the jack is safe to lift the load

You must

(1) Visually examine the general condition of the jack before each use.

Note:

If a jack is to be used more than once on a shift, the visual examination is only required before the jack is used for the first time that shift.

You must

(2) Make sure the weight to be lifted or supported is within the rated load of the jack.

(3) Make sure the base of the jack is on a firm foundation or blocked before lifting the load.

(4) Make sure hydraulic jacks exposed to freezing temperatures function properly at the temperature they will be used.

LIFTING THE LOAD

WAC 296-807-17015
Lift the load safely

You must

(1) Place a block between the load cap and the load if the load could slip off the jack.

(2) Secure the load from falling or slipping immediately after it is raised by one or more of the following:

- Cribbing
- Blocking
- Some other equally effective method.

(3) Make sure you don't exceed the limit of travel of the jack.

Note:

The limit of travel can be determined by one or more of the following:

- A positive stop
- A stop indicator
- Some other equally effective method.

INSPECTION AND MAINTENANCE

WAC 296-807-17020

Visually inspect jacks and keep them in good working order

Note:
There are 2 types of inspection, frequent or periodic, depending on how often they are done.

You must

(1) Inspect jacks at appropriate intervals:

- Make sure frequent inspections are done by the operator or other designated person as follows:
  - Before a jack is first placed in service.
  - Monthly for a jack used in normal service.
  - Daily or before each use for a jack used for other than normal service.
  - Before using a jack that has been altered, modified, or repaired.
  - Before using a jack that hasn't been used in one year or more.
- Make sure a periodic inspection of the jack is done once a year.
- Inspect the jack using Table 4, Jack Inspection Requirements, during any frequent or periodic inspection.

(2) Make sure a jack that is out of order is:

- Tagged
- Not used until repaired.

(3) Make sure a jack is properly lubricated at regular intervals.

Note:
The jack should be lubricated following the manufacturer's instructions.

- Continued -

WAC 296-807-17020 (Continued)

You must

Table 4
Jack Inspection Requirements

Inspection Item	Frequent Inspection	Periodic Inspection
Check all of the following items that apply to the jack:		
- Improper pawl engagement	X	X
- Excessive pawl wear	X	X
- Chipped, cracked, or worn rack teeth	X	X
- Damaged, bent, or worn threads	X	X
- Leaking hydraulic fluid	X	X
- Scored or damaged plunger	X	X
- Improper functioning	X	X
- Free movement of swivel, heads, and caps	X	X
- Loose bolts or rivets	X	X
- Damaged or improperly assembled accessory equipment	X	X
- Rack wear or bending	X	X
- Other items as specified in the manufacturer's instructions	X	X
Watch the jack during operation	X	X
More detailed inspection required if a designated person determines any condition discovered is a hazard	X	
Clean and check internal parts for wear or damage if inspection indicates an internal problem		X

Notes

Portable Tools Using Abrasive Wheels

WAC 296-807-180

Summary

YOUR RESPONSIBILITY:

Make sure abrasive wheel tools and wheels are safe to use

Important:

This section applies to portable tools using abrasive wheels.

Definition:

Abrasive wheel

A grinding tool consisting of bonded abrasive grains. This includes diamond and reinforced wheels.

Exemption:

This section doesn't apply to machines using:

- Natural sandstone wheels
- Pulpstone wheels
- Coated abrasive products
- Loose abrasives.

You must

DESIGN AND CONSTRUCTION

Make sure abrasive wheels and tools are properly designed and constructed
WAC 296-807-18005 180-4

- Continued -

Summary

WAC 296-807-180 (Continued)

GUARDS

Make sure machines have safety guards
WAC 296-807-18010 180-5

Keep safety guards in good functional condition
WAC 296-807-18015 180-6

GUARDS - SPECIFIC WHEELS

Use specific safety guards for machines using Type 1 grinding wheels, cutting-off wheels, and tuck pointing wheels
WAC 296-807-18020 180-7

Use specific safety guards for vertical and angle grinders using Type 6 or Type 11 wheels
WAC 296-807-18025 180-7

Use specific safety guards for vertical and angle grinders using Type 27, 28 and 29 wheels
WAC 296-807-18030 180-8

SIDE HANDLES

Use side handles on vertical and angle grinders
WAC 296-807-18035 180-8

ABRASIVE WHEELS

Make sure abrasive wheels are safe to use
WAC 296-807-18040 180-9

- Continued -

Summary

WAC 296-807-180 (Continued)

MOUNTING

Mount wheels properly
WAC 296-807-18045 180-10

FLANGES

Use proper flanges
WAC 296-807-18050 180-11

Make sure flanges are in good condition
WAC 296-807-18055 180-13

FLANGES - SPECIFIC WHEELS

Use specific flanges for Type 1 cutting-off wheels
WAC 296-807-18060 180-14

Use specific flanges for Type 27A cutting-off wheels
WAC 296-807-18065 180-14

Use specific flanges for threaded hole wheels
WAC 296-807-18070 180-15

Use specific flanges for cup, cone or plug wheels with threaded inserts or projecting studs
WAC 296-807-18075 180-15

BLOTTERS

Use blotters when required
WAC 296-807-18080 180-16

BLOTTERS - TYPE 6 AND 11 WHEELS

Meet specific blotter requirements when using modified Types 6 and 11 wheels (terrazzo)
WAC 296-807-18085. 180-17

Portable Tools Using Abrasive Wheels

WAC 296-807-180

Rule

DESIGN AND CONSTRUCTION

WAC 296-807-18005

Make sure abrasive wheels and tools are properly designed and constructed

You must

- Make sure abrasive wheels and tools meet the design and construction requirements of:
  - American National Standards Institute (ANSI) B7.1-2000, Safety Requirements for the Use, Care and Protection of Abrasive Wheels

    OR
  - ANSI B186.1-1984, Safety Code for Portable Air Tools.

Note:

Tools may have a statement on the tool or in the instruction manual that the tool meets the appropriate ANSI standard. If in doubt, check with the manufacturer.

Helpful Tool:

Abrasive wheel illustrations

You can find illustrations of specific types of wheels, general types of flanges, and mounting requirements, in the Resources section of this chapter.

GUARDS

WAC 296-807-18010
Make sure machines have safety guards

You must

- Use abrasive wheels only on machines that have safety guards.
- Make sure the safety guard:
  - Is mounted so it maintains proper alignment with the wheel
  - Is mounted with fasteners strong enough to keep the guard in position if a wheel breaks
  - Is positioned to deflect pieces of an accidentally broken wheel away from the operator
  - Covers the spindle end, nut, and flange projections.

Exemption:

Safety guards aren't required on machines that use:

- Wheels for internal grinding while advancing, retracting or within the work
- Mounted wheels 2 inches or less in diameter
- Types 16, 17, 18, 18R, and 19 cones and plugs and threaded hole pot balls where:
  - The work offers protection

    or
  - The size doesn't exceed 3 inches in diameter by 5 inches long.
- Notched, segmented, or continuous rim metal centered diamond lapidary wheels that are:
  - Used with a coolant deflector

    and
  - Operated at 3,500 SFPM or less.

- Continued -

Rule

WAC 296-807-18010 (Continued)

Exemption:

- Type 1 wheels that are:
  - 2 inches or less in diameter
  - 1/2 inch or less thick
  - Operating at peripheral speeds less than 1,800 SFPM
  - Mounted on mandrels and used in portable drills.
- Type 1 reinforced wheels that are:
  - 3 inches or less in diameter 1/4 inch or less thick
  - Operating at peripheral speeds of 9,500 SFPM or less
  - Used by operators wearing safety glasses and face shields.
- Valve seating grinding wheels.

WAC 296-807-18015

Keep safety guards in good functional condition

You must

- Make sure safety guards are in good functional condition.
- Replace any safety guard that:
  - Is damaged, bent or severely worn

    OR
  - Has been hit by parts from a breaking wheel.

GUARDS - SPECIFIC WHEELS

WAC 296-807-18020

Use specific safety guards for machines using Type 1 grinding wheels, cutting-off wheels, and tuck pointing wheels

You must

- Make sure the safety guard covers the top and sides of the wheel for at least 180°.

Note:

It isn't required to cover the spindle end, nut and outer flange.

WAC 296-807-18025

Use specific safety guards for vertical and angle grinders using Type 6 or Type 11 wheels

You must

- Make sure the safety guard:
  - Covers the wheel's plane of rotation toward the operator for at least 180°
  - Covers the side of the wheel toward the driving flange for at least 180°
  - Has a skirt which is adjustable to within 1/8 inch of the plane of the surface of the wheel.
- Make sure not to use a "revolving cup guard."

Note:

"Cup back bushings" don't substitute for safety guards.

Rule

WAC 296-807-18030

Use specific safety guards for vertical and angle grinders using Type 27, 28 and 29 wheels

You must

- Make sure safety guards:
  - Cover the wheel's plane of rotation toward the operator for at least 180°
  - Cover the side of the wheel toward the driving flange for at least 180°
  - Have a lip on the outer edge that:
    - Extends beyond the surface of the wheel throughout the 180° coverage

      AND
    - Curls inward to deflect wheel fragments.

SIDE RAILS

WAC 296-807-18035

Use side handles on vertical and angle grinders

You must

- Use a side handle on all 4-inch and larger vertical and angle grinders.

ABRASIVE WHEELS

WAC 296-807-18040

Make sure abrasive wheels are safe to use

You must

- Do the following before mounting a wheel:
  - Visually inspect the wheel for cracks or damage
  - Perform a ring test for cracks (size and shape of the wheel permitting)
  - Make sure the spindle speed of the machine isn't greater than the operating speed of the wheel.

You must

- Make sure a damaged or cracked wheel isn't mounted or used.

Helpful Tool:

Ring Test

You can find illustrations on how to do a ring test in the Resources section of this chapter.

Portable Tools Using Abrasive Wheels

WAC 296-807-180

Rule

MOUNTING

WAC 296-807-18045

Mount wheels properly

You must

(1) Make sure wheels fit freely on the spindle, wheel sleeves, or adaptors, and remain free under all grinding conditions.

(2) Make sure wheel, blotter and flange surfaces that contact each other are flat and free of foreign particles.

(3) Make sure any reducing bushing used in the wheel hole:

- Fits freely on the spindle and maintains proper clearance
- Doesn't exceed the width of the wheel or contact the flanges.

(4) Make sure that multiple wheels mounted between a single set of flanges are either:

- Cemented together
  OR
- Separated by spacers that have a diameter and bearing surface that is the same as the mounting flanges.

FLANGES

WAC 296-807-18050
Use proper flanges

You must

- Mount all abrasive wheels between flanges that have a diameter at least 1/3 the diameter of the wheel.

Exemption:

- Mounted wheels
- Cup, cone or plug wheels with threaded inserts or projecting studs
- Abrasive disc wheels (inserted nut, inserted washer and projecting stud type)
- Plate mounted wheels
- Cylinder, cup, or segmental wheels mounted in chucks
- Types 27, 28 and 29 wheels
- Internal wheels less than 2 inches in diameter
- Modified Type 6 and 11 wheels (terrazzo)
- Types 1 and 27A cutting-off wheels.

You must

- Make sure flanges are:
  - Dimensionally accurate
  - Properly balanced
  - Flat
  - Free of rough surfaces or sharp edges.

- Continued -

Rule

WAC 296-807-18050 (Continued)

You must

- Make sure, if a wheel is mounted between 2 flanges, that both flanges:
  - Are the same diameter
  - Have equal bearing surfaces.

Exemption:

The following wheels don't require same diameter, equal bearing surface flanges:

- Types 27, 28, and 29 wheels with adaptors
- Modified Types 6 and 11 wheels with tapered K dimension
- Internal wheels less than 2 inches in diameter.

You must

- Make sure the driving flange is:
  - Part of the spindle

    OR
  - Securely fastened to the spindle.

WAC 296-807-18055

Make sure flanges are in good condition

You must

- Make sure flange bearing surfaces are in good condition.
- Replace or remachine any flange with a mounting surface that has any of the following problems:
  - Warped
  - Burred on the bearing surface
  - Excessively worn (thickness or diameter)
  - Out of true.

Note:

Flanges that are refaced or trued need to satisfy minimum dimension requirements specified in ANSI B7.1-2000, Safety Requirements for the Use, Care and Protection of Abrasive Wheels.

Rule

FLANGES - SPECIFIC WHEELS

WAC 296-807-18060

Use specific flanges for Type 1 cutting-off wheels

You must

- Mount Type 1 cutting-off wheels between flanges that are:
  - Properly relieved with matching bearing surfaces
  - At least 1/4 the wheel diameter.

Note:

American National Standards Institute (ANSI) B7.1-2000, Safety Requirements for the Use, Care and Protection of Abrasive Wheels, has specific exemptions for some reinforced, bonded abrasive cutting-off wheels and steel centered, diamond cutting-off wheels. These wheels are primarily used for masonry cutting and concrete sawing.

WAC 296-807-18065

Use specific flanges for Type 27A cutting-off wheels

You must

- Mount Type 27A cutting-off wheels between flanges that are:
  - Flat (unrelieved) with matching bearing surfaces
  - At least 1/4 the wheel diameter.

WAC 296-807-18070

Use specific flanges for threaded hole wheels

You must

- Use a back flange to mount threaded hole wheels that is:
  - Flat (unrelieved)
  - Securely fastened and square to the spindle axis
  - Able to properly support the wheel.

WAC 296-807-18075

Use specific flanges for cup, cone or plug wheels with threaded inserts or projecting studs

You must

- Mount cup, cone or plug wheels with threaded inserts or projecting studs against a straight, unrelieved flange.

Portable Tools Using Abrasive Wheels

WAC 296-807-180

Rule

BLOTTERS

WAC 296-807-18080

Use blotters when required

You must

- Use a blotter between each flange and the abrasive wheel surface to uniformly distribute flange pressure.
- Make sure the blotter covers the entire flange contact area.
- Use a new blotter each time a wheel is mounted unless the wheel has a blotter already attached to it by the manufacturer.
- Make sure scuffed or damaged blotters aren't used.

Exemption:

You don't need to use a blotter with:

- Mounted wheels
- Abrasive disc and Type 2 wheels which are mounted by inserted nuts, inserted washers, or projecting studs
- Plate mounted wheels
- Wheels mounted in chucks (such as cylinders and segmental wheels)
- Types 27, 28 and 29 wheels
- Type 1 and Type 27A cutting-off wheels
- Internal wheels less than 2 inches in diameter
- Diamond and cubic boron nitride wheels with metal or carbon fiber cores.

BLOTTERS - TYPE 6 AND 11 WHEELS

WAC 296-807-18085

Meet specific blotter requirements when using modified Types 6 and 11 wheels (terrazzo)

You must

- Mount modified Types 6 and 11 wheels (terrazzo) with a blotter applied to the flat side of the wheel only.

Notes

Definitions

Abrasive wheel

A grinding tool consisting of bonded abrasive grains. This includes diamond and reinforced wheels.

Blind hole

A hole drilled in an object, such as an abrasive wheel, that doesn't go all the way through.

Blotter

A compressible disc or washer, usually of blotting paper, plastic, cardboard, or gasket material, that is used between the wheel and the flanges to evenly distribute flange pressure on the wheel.

Cone and plug wheels (Types 16, 17, 18, 18R, and 19)

Abrasive wheels manufactured with blind hole threaded bushings. They may be used on all surfaces except the flat mounting surface (D). Specific characteristics of the different cone and plug wheels are:

– T• ype 16 cones have a curved side with a nose radius

– Type 17 cones have straight sides with or without a nose radius

– Type 18 and 18R plug wheels are cylindrical in shape with either a square or curved grinding end

– Type 19 cone wheels are a combination of cone and plug shapes

Cutting-off wheels

Abrasive wheels used to cut material such as masonry, pipe, etc.

Designated person

A person selected or assigned by the employer or the employer's representative as competent to perform specific duties.

- Continued -

Portable Power Tools

WAC 296-807-190

Definitions

WAC 296-807-190 (Continued)

Discharge opening

An opening in a mower housing for discharging grass.

Flanges

Collars, discs or plates between or against which wheels are mounted. There are 4 types of flanges:

– Adaptor

– Sleeve

– Straight relieved

– Straight unrelieved.

Grass catcher

Parts or a combination of parts to collect grass clippings or debris.

Guard (abrasive wheels)

An enclosure designed to restrain the pieces of an abrasive wheel and furnish protection to the operator if the wheel is broken during operation.

Guard

A part or assembly to prevent accidental contact with hazardous machine parts or to protect persons from other hazards created by the machinery.

Inorganic bonded wheel

Abrasive wheels that are bonded by means of inorganic material such as clay, glass, porcelain, sodium silicate, magnesium oxychloride, or metal.

- Continued -

WAC 296-807-190 (Continued)

Jack

A portable hand- or power-operated mechanism for lifting, lowering or moving horizontally a load by applying a pushing force.

Modified Types 6 and 11 wheels (terrazzo)

Similar to Type 6 “straight cup” wheels and Type 11 “flaring cup” wheels except for the bottom of the cup. The bottom of the cup is flat in Type 6 and 11 wheels. The modified wheels have bottoms that are sloped downwards towards the mounting hole. These modified wheels need to be mounted using a special tapered flange furnished by the tool manufacturer. These wheels are used in the terrazzo trade.

Mounted wheels

Bonded abrasive wheels of various shapes, usually 2 inches diameter or smaller, that are secured to plain or threaded steel mandrels.

Normal service (jacks)

Raising or lowering axial loads that are 85% or less of the rated load under controlled conditions.

Organic bonded wheels

Abrasive wheels that are bonded by means of organic material such as resin, rubber, shellac, or other similar bonding agent.

Rated load

The maximum load that the jack is designed to lift or support.

Reinforced wheels

Organic bonded abrasive wheels which have webbing, fabric or filament to provide resistance to complete breaking of the wheel should it become cracked or damaged.

- Continued -

Portable Power Tools

WAC 296-807-190

Definitions

WAC 296-807-190 (Continued)

Terrazzo

A material of stone chips, such as marble, set in mortar and polished.

Threaded hole wheels

Abrasive wheels that have one central threaded bushing, securely anchored in place. They are mounted by being screwed onto a threaded machine spindle so that the wheel back seats firmly against an unrelieved flat back flange.

Tuck pointing wheels

Tuck pointing abrasive wheels are Type 1 reinforced, organic bonded wheels and have diameter, thickness and hole size dimensions. They are used to remove cement, mortar, or other nonmetallic jointing material.

Type 1 wheel

An abrasive wheel shaped like a disc with a mounting hole in the middle. Sometimes called a "straight wheel." It has diameter (D), thickness (T), and hole size (H) dimensions. Grinding is normally done on the periphery (outside curve) of the wheel (T dimension). Can be used for grinding, cutting-off, and tuck pointing.

Type 2 wheel

An abrasive wheel shaped like an open-ended, hollow cylinder. Sometimes called a cylinder wheel. It has diameter (measured from the outer wall of the cylinder), wheel thickness (height of the cylinder), and rim thickness (thickness of the cylinder wall). Grinding is done on the end of the cylinder (rim thickness dimension).

Type 6 wheel

An abrasive wheel shaped like a straight-sided cup or bowl with a mounting hole in the bottom of the cup. Sometimes called a "cup wheel." It has diameter (D), thickness (T), hole size (H), rim thickness (W), and back thickness (E) dimensions. Grinding is normally done on the cup rim (W dimension).

- Continued -

WAC 296-807-190 (Continued)

Type 11 wheel

An abrasive wheel shaped like a cup or bowl with a mounting hole in the bottom of the cup. The sides of the cup aren't straight-sided but are angled outward. Sometimes called a "flaring cup wheel" since the sides are "flared" out. It has double diameter dimensions (top D and bottom J). It also has thickness (T), hole size (H), rim thickness (W) and back thickness (E) dimensions. Grinding is normally done on the cup rim (W dimension).

Type 16, 17, 18, 18R, and 19 wheels

See cone and plug wheels.

Type 27 wheel

An abrasive wheel similar to a Type 1 wheel, but the center of the wheel around the mounting hole is pushed back (depressed). Sometimes called a "depressed center" wheel. It has diameter (D), thickness (U) and hole size (H) dimensions. The depressed center allows grinding on the flat surface of the wheel without interference from the flange or mounting hardware.

Type 27A cutting-off wheel

Similar to a Type 27 wheel. Specifically designed for use on cutting-off machines.

Type 28 wheel

An abrasive wheel similar to a Type 27 wheel, but the face of the wheel is angled upward and away from the mounting hole. The face of a Type 27 wheel is flat and perpendicular to the mounting hole. A Type 28 wheel is also called a "depressed center" wheel. It has diameter (D), thickness (U) and hole size (H) dimensions. The depressed center allows grinding without interference from the mounting. A Type 28 wheel has a saucer-shaped grinding rim and is designed for corner grinding and side grinding.

Type 29 wheel

An abrasive wheel that has reversed, saucer-shaped grinding rims (similar to a partially opened umbrella).

Notes

Helpful Tools

Center Punch Test R-3
Ring Test R-5
Abrasive Wheel Illustrations R-8

Notes

Center Punch Test

Use with WAC 296-807-150, Powder Actuated Fastening Systems

Do a center punch test with a hammer to determine the suitability of the base material for a powder actuated fastening. This test is relatively simple and can help you do a safe, successful fastening. Be sure to wear the appropriate eye protection when performing this test.

The test is done as follows:

(1) Select the fastener to be used for the job.

(2) Place the point of the fastener against the base material.

(3) Strike the fastener with a single hammer blow, then examine the point. If the point of the fastener is not blunted and the base material has a clear point indentation, you can do the first test installation.

Use of a powder actuated fastening system is not recommended if the following occurs during the center punch test:

- The fastener point has been blunted. This indicates that the base material is too hard.

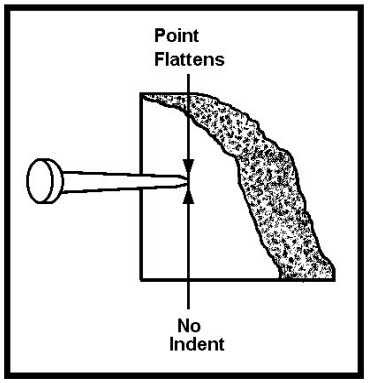

-Continued-

Center Punch Test

Use with WAC 296-807-150, Powder Actuated Fastening Systems

(continued)

- The base material cracks or shatters. This indicates that the base material is too brittle.

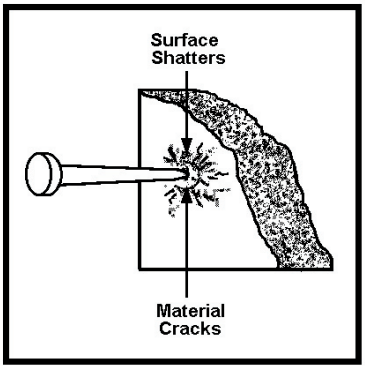

- When using an average hammer blow, the fastener penetrates the base material easily. This indicates that the base material is too soft.

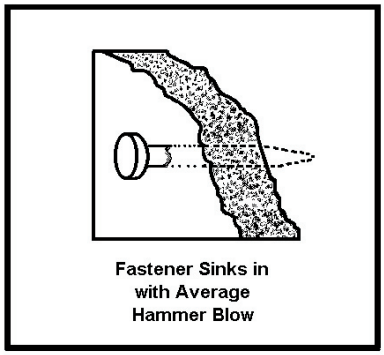

Ring Test

Use with WAC 296-807-180, Portable Tools Using Abrasive Wheels

A ring test should be performed before mounting an abrasive wheel. This test is simple and can help determine if the wheel is cracked.

Limitations:

The wheel has to be dry and free of sawdust when applying the ring test, otherwise the sound may be deadened.

The ring test doesn't work with certain wheels because of their shape or size.

Examples include:

- Wheels 4 inches diameter and smaller
- Plugs and Cones
- Mounted Wheels
- Segments
- Plate-Mounted Wheels
- Inserted Nut and Projecting Stud Disc Wheels

How to do the test:

(1) Suspend the wheel by putting a small pin or your finger through the arbor hole in the wheel. Heavier wheels may be allowed to rest in a vertical position on a clean hard floor (See Illustration 1).

(2) Tap the flat side of the wheel with a light non-metallic implement, such as the handle of a screw driver, at a point

- 45 degrees from the vertical center line on each side of the wheel (See Illustration 2)

  and

- 1 – 2 inches from the edge of the wheel. Large, thick wheels may be struck on the periphery rather than the side of the wheel.

(3) Rotate the wheel 45 degrees and repeat the test until the entire wheel has been checked.

-Continued-

Ring Test

Use with WAC 296-807-180, Portable Tools Using Abrasive Wheels

(continued)

How to use the results:

The ring test depends on the fact that a crack in the wheel will normally change the sound emitted when the wheel is lightly tapped. An undamaged wheel will give a clear tone. If cracked, there will be a dead sound and not a clear ring.

Comparison of the sound with other wheels of the same lot and specification will allow rejection of any wheel with a suspiciously different ring.

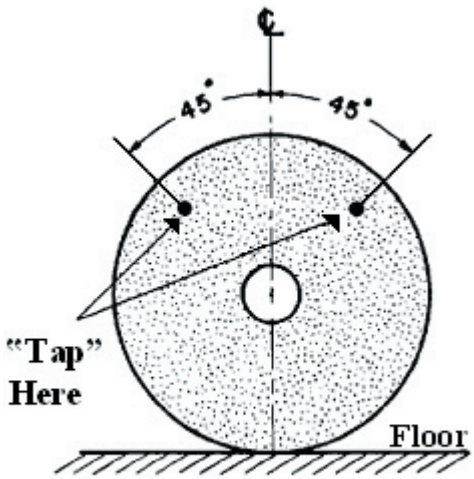

Heavy Wheels
Support on clean hard floor

-Continued-

Ring Test

Use with WAC 296-807-180, Portable Tools Using Abrasive Wheels

(continued)

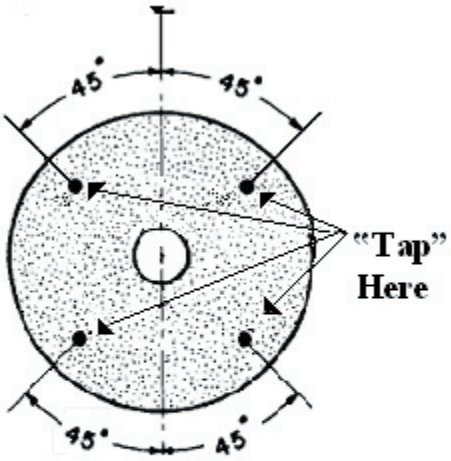

Light Wheels
Support on clean hard floor
small pin or finger

Resources

Abrasive Wheel Illustrations

Use with WAC 296-807-180, Portable Tools Using Abrasive Wheels

This tool contains illustrations of:

- Some specific types of wheels used in this chapter
- General types of flanges used with abrasive wheels
- Mounting of some specific types of wheels

Information about the wheel type includes a definition and may have notes concerning wheel use or limitations.

Information about mounting wheels lists only the mounting requirements.

You will find these illustrations in this tool:

Type 1 Wheel R-9

Type 6 Wheel R-10

Type 11 Wheel R-11

Type 27 and 27A Wheels R-12

Type 28 Wheel R-13

Type 29 Wheel R-14

Modified Type 6 and 11 Wheels (Terrazzo) R-15

Mounted Wheels R-16

Cone and Plug Wheels R-17

General Types of Flanges R-18

Mounting Type 27A Cutting-off Wheels R-20

Mounting Threaded Hole Wheels R-21

-Continued-

Abrasive Wheel Illustrations - Wheels

Use with WAC 296-807-180, Portable Tools Using Abrasive Wheels

(continued)

Type 1 wheel

An abrasive wheel shaped like a disc with a mounting hole in the middle. Sometimes called a “straight wheel.” It has diameter (D), thickness (T), and hole size (H) dimensions. Grinding is normally done on the periphery (outside curve) of the wheel (T dimension).

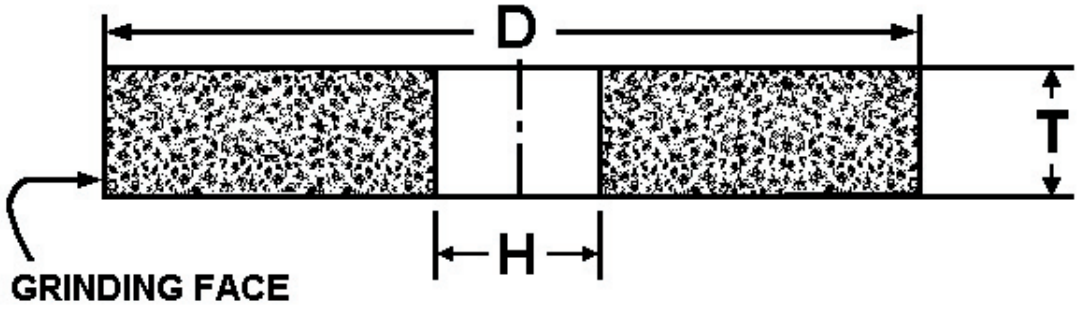

-Continued-

Abrasive Wheel Illustrations - Wheels

Use with WAC 296-807-180, Portable Tools Using Abrasive Wheels

(continued)

Type 6 wheel

An abrasive wheel shaped like a straight-sided cup or bowl with a mounting hole in the bottom of the cup. Sometimes called a “cup wheel.” It has diameter (D), thickness (T), hole size (H), rim thickness (W), and back thickness (E) dimensions. Grinding is normally done on the cup rim (W dimension).

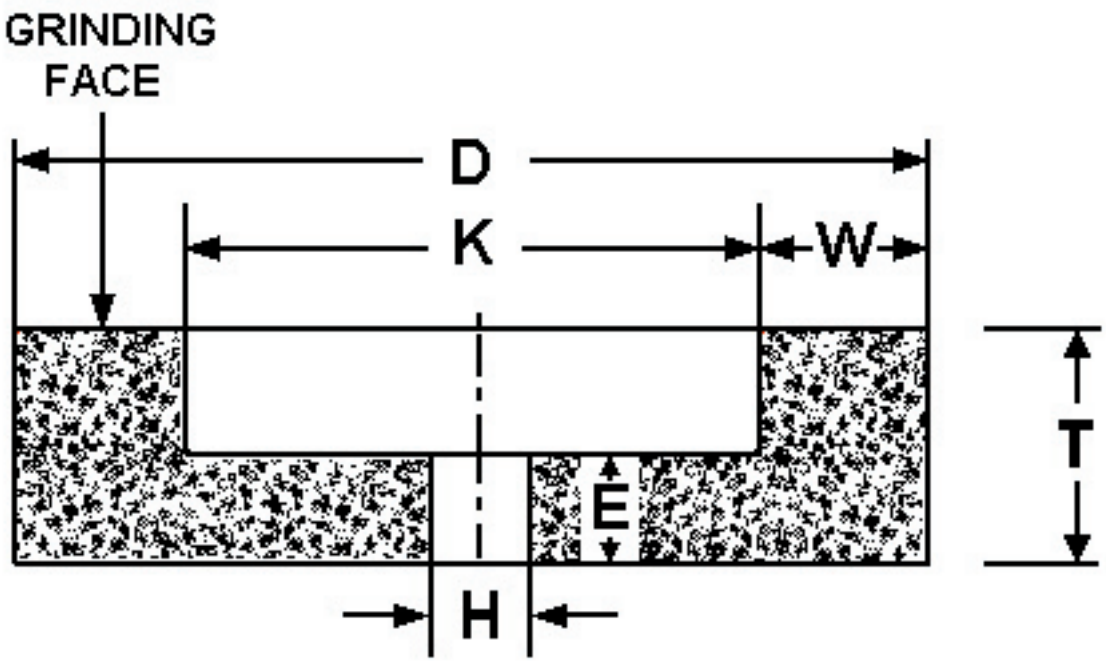

-Continued-

Abrasive Wheel Illustrations - Wheels

Use with WAC 296-807-180, Portable Tools Using Abrasive Wheels

(continued)

Type 11 wheel

An abrasive wheel shaped like a cup or bowl with a mounting hole in the bottom of the cup. The sides of the cup are not straight-sided but are angled outward. Sometimes called a “flaring cup wheel” since the sides are “flared” out. It has double diameter dimensions (top D and bottom J). It also has thickness (T), hole size (H), rim thickness (W) and back thickness (E) dimensions. Grinding is normally done on the cup rim (W dimension).

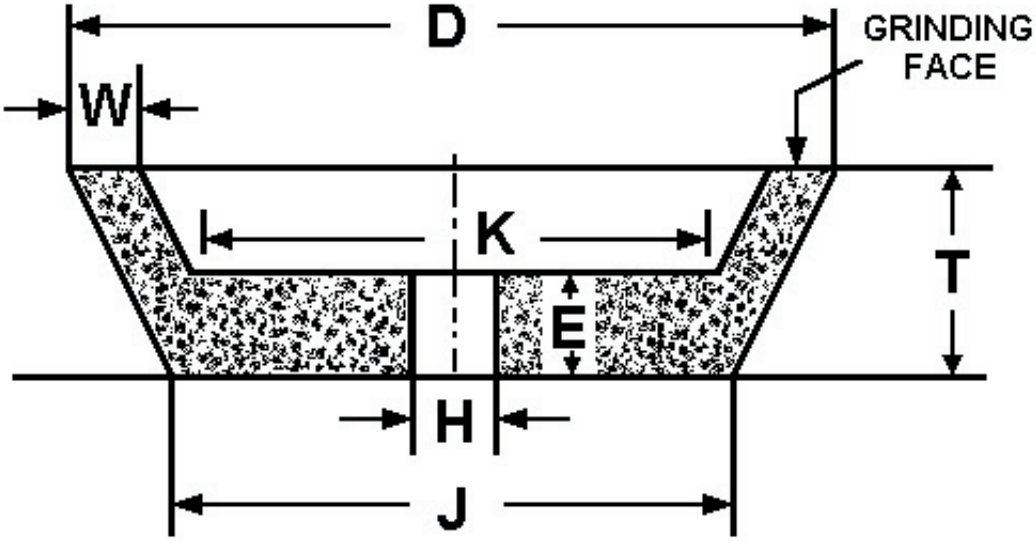

-Continued-

Abrasive Wheel Illustrations - Wheels

Use with WAC 296-807-180, Portable Tools Using Abrasive Wheels

(continued)

Type 27 wheel

An abrasive wheel similar to a Type 1 wheel, but the center of the wheel around the mounting hole is pushed back (depressed). Sometimes called a “depressed center” wheel. It has diameter (D), thickness (U) and hole size (H) dimensions. The depressed center allows grinding on the flat surface of the wheel without interference from the flange or mounting hardware.

Type 27A cutting-off wheel

Similar to a Type 27 wheel. Specifically designed for use on cutting-off machines.

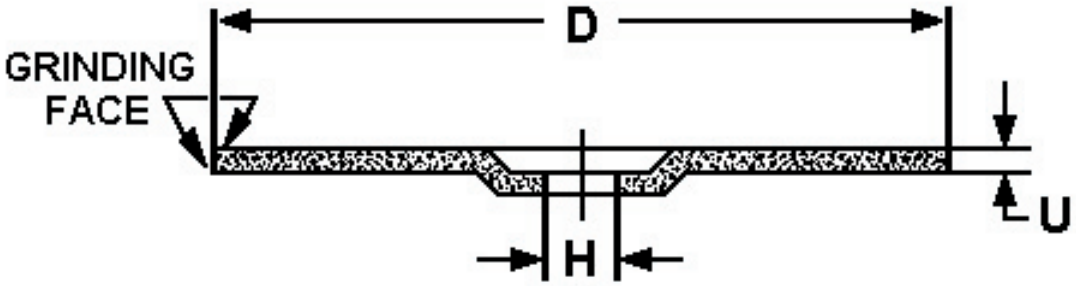

Note:

- Type 27 wheels are manufactured with flat grinding rims or faces and are designed for:
  - Side grinding when held at a slight angle to the workpiece
  - Peripheral grinding, including small cutting-off and shallow notching operations

- Type 27 wheels may be used flat when grinding masonry and concrete surfaces such as ceilings and walls.

-Continued-

Abrasive Wheel Illustrations - Wheels

Use with WAC 296-807-180, Portable Tools Using Abrasive Wheels

(continued)

Type 28 wheel

An abrasive wheel similar to a Type 27 wheel, but the face of the wheel is angled upward and away from the mounting hole. The face of a Type 27 wheel is flat and perpendicular to the mounting hole. A Type 28 wheel is also called a "depressed center" wheel. It has diameter (D), thickness (U) and hole size (H) dimensions. The depressed center allow grinding without interference from the mounting. A Type 28 wheel has a saucer-shaped grinding rim and is designed for corner grinding and side grinding.

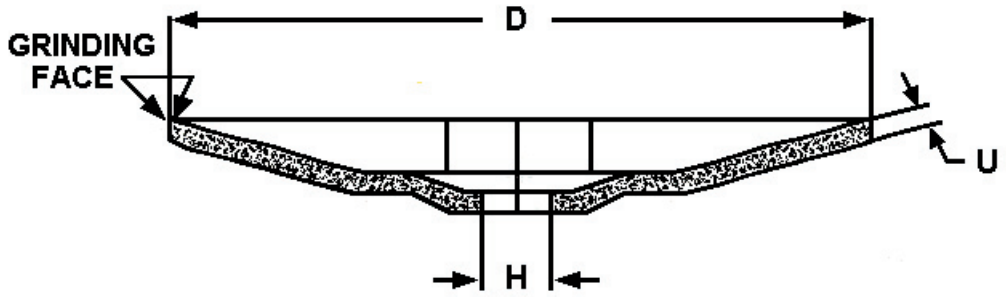

-Continued-

Abrasive Wheel Illustrations - Wheels

Use with WAC 296-807-180, Portable Tools Using Abrasive Wheels

(continued)

Type 29 wheel

An abrasive wheel that has reversed, saucer-shaped grinding rims (similar to a partially opened umbrella).

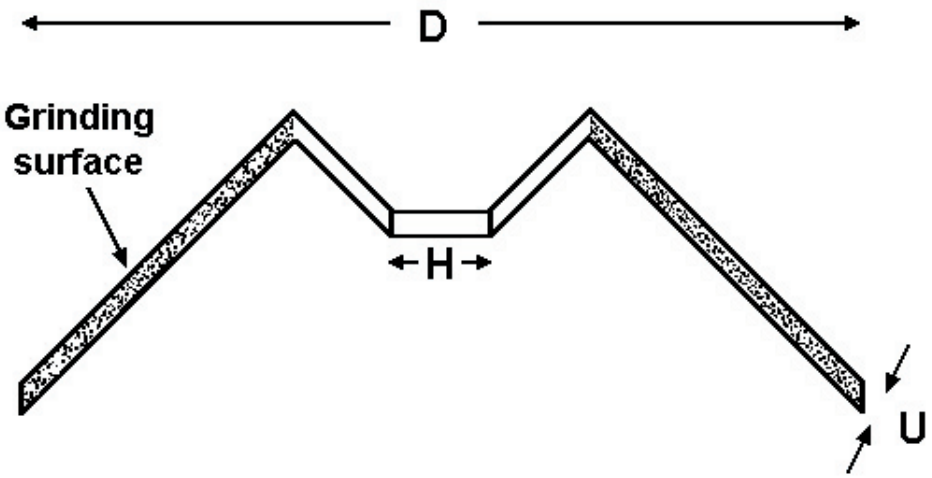

-Continued-

Abrasive Wheel Illustrations - Wheels

Use with WAC 296-807-180, Portable Tools Using Abrasive Wheels

(continued)

Modified Type 6 and 11 wheels (Terrazzo)

Similar to Type 6 “straight cup” wheels and Type 11 “flaring cup” wheels except for the bottom of the cup. The bottom of the cup is flat in Type 6 and 11 wheels. The modified wheels have bottoms that are sloped downwards towards the mounting hole. These modified wheels need to be mounted using a special tapered flange furnished by the tool manufacturer. These wheels are used in the terrazzo trade.

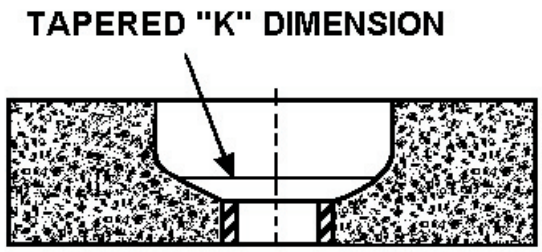

TYPE 6 WHEEL (TERRAZZO)

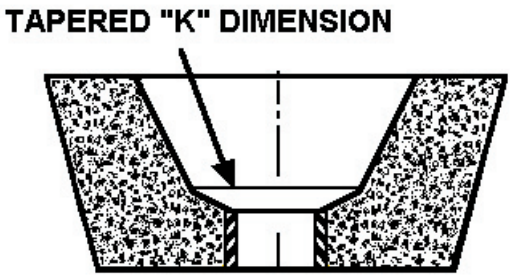

TYPE II WHEEL (TERRAZZO)

-Continued-

Abrasive Wheel Illustrations - Wheels

Use with WAC 296-807-180, Portable Tools Using Abrasive Wheels

(continued)

Mounted wheels

Bonded abrasive wheels of various shapes, usually 2 inches diameter or smaller, that are secured to plain or threaded steel mandrels.

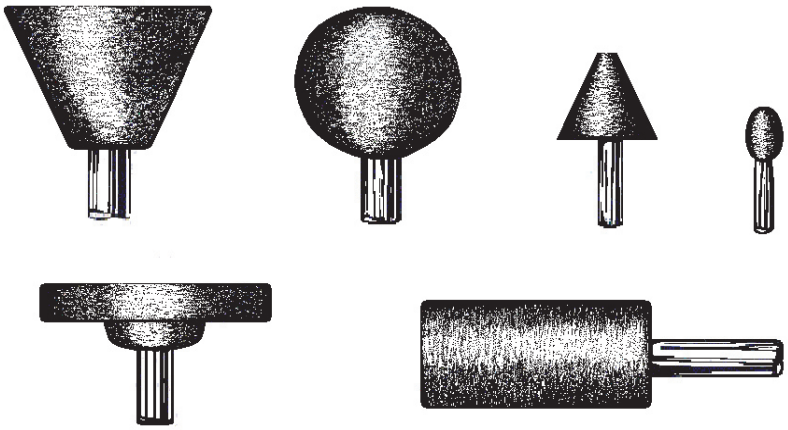

-Continued-

Abrasive Wheel Illustrations - Wheels

Use with WAC 296-807-180, Portable Tools Using Abrasive Wheels

(continued)

Cone and plug wheels (Types 16, 17, 18, 18R, and 19)

Abrasive wheels manufactured with blind hole threaded bushings. They may be used on all surfaces except the flat mounting surface (D). Specific characteristics of the different cone and plug wheels are:

- Type 16 cone wheels have a curved side with a nose radius
- Type 17 cone wheels have straight sides with or without a nose radius
- Type 18 and 18R plug wheels are cylindrical in shape with either a square or curved grinding end
- Type 19 cone wheels are a combination of cone and plug shapes

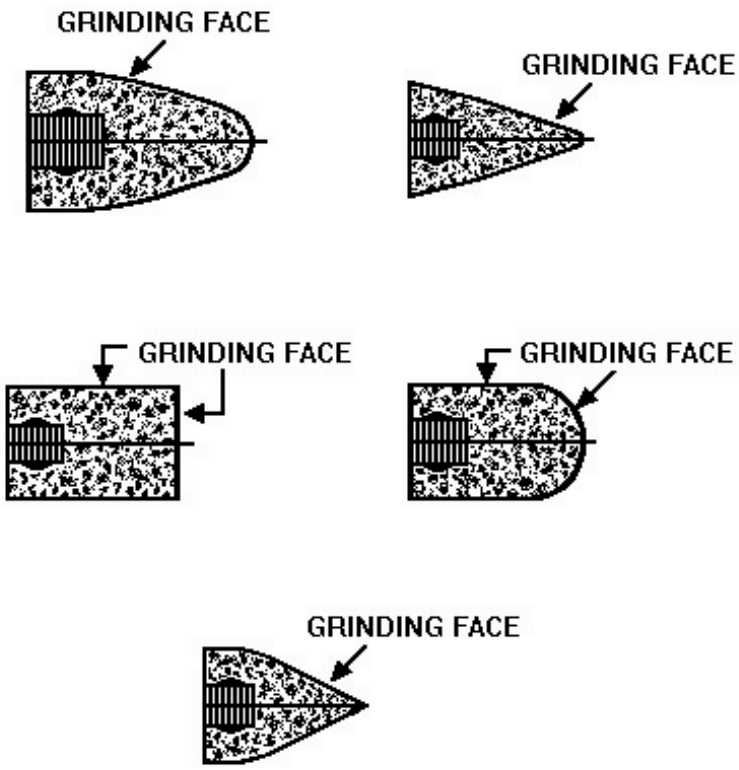

-Continued-

Abrasive Wheel Illustrations - Flanges

Use with WAC 296-807-180, Portable Tools Using Abrasive Wheels

(continued)

Flanges

Collars, discs or plates between or against which wheels are mounted. There are four types of flanges:

- Adaptor
- Sleeve adaptor
- Straight relieved
- Straight unrelieved

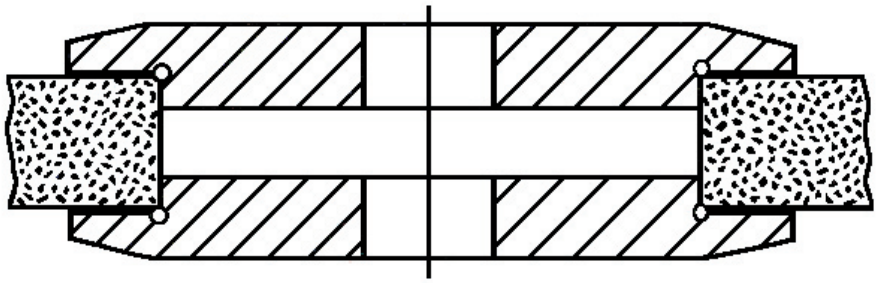

ADAPTOR FLANGE

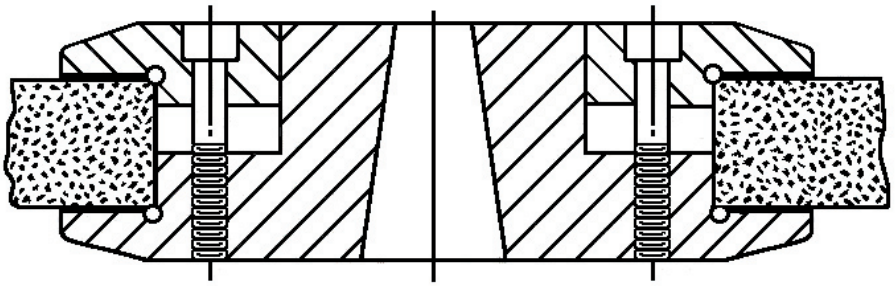

SLEEVE ADAPTOR FLANGE

-Continued-

Abrasive Wheel Illustrations - Flanges

Use with WAC 296-807-180, Portable Tools Using Abrasive Wheels

(continued)

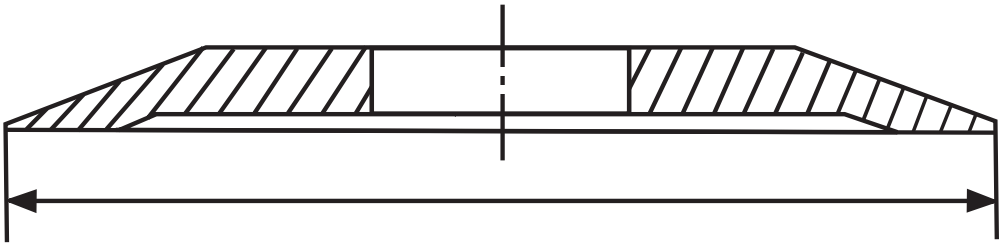

STRAIGHT RELIEVED FLANGE

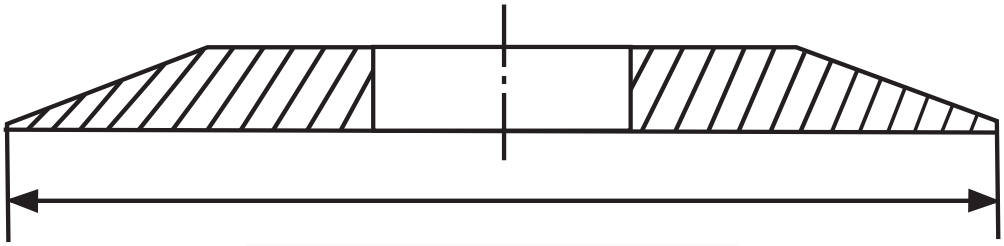

STRAIGHT UNRELIEVED FLANGE

-Continued-

Abrasive Wheel Illustrations - Mounting

Use with WAC 296-807-180, Portable Tools Using Abrasive Wheels

(continued)

Mounting Type 27A cutting-off wheels

Type 27A cutting-off wheels are mounted between flanges that are:

- Flat (unrelieved) with matching bearing surfaces

  and

- At least 1/4 the wheel diameter

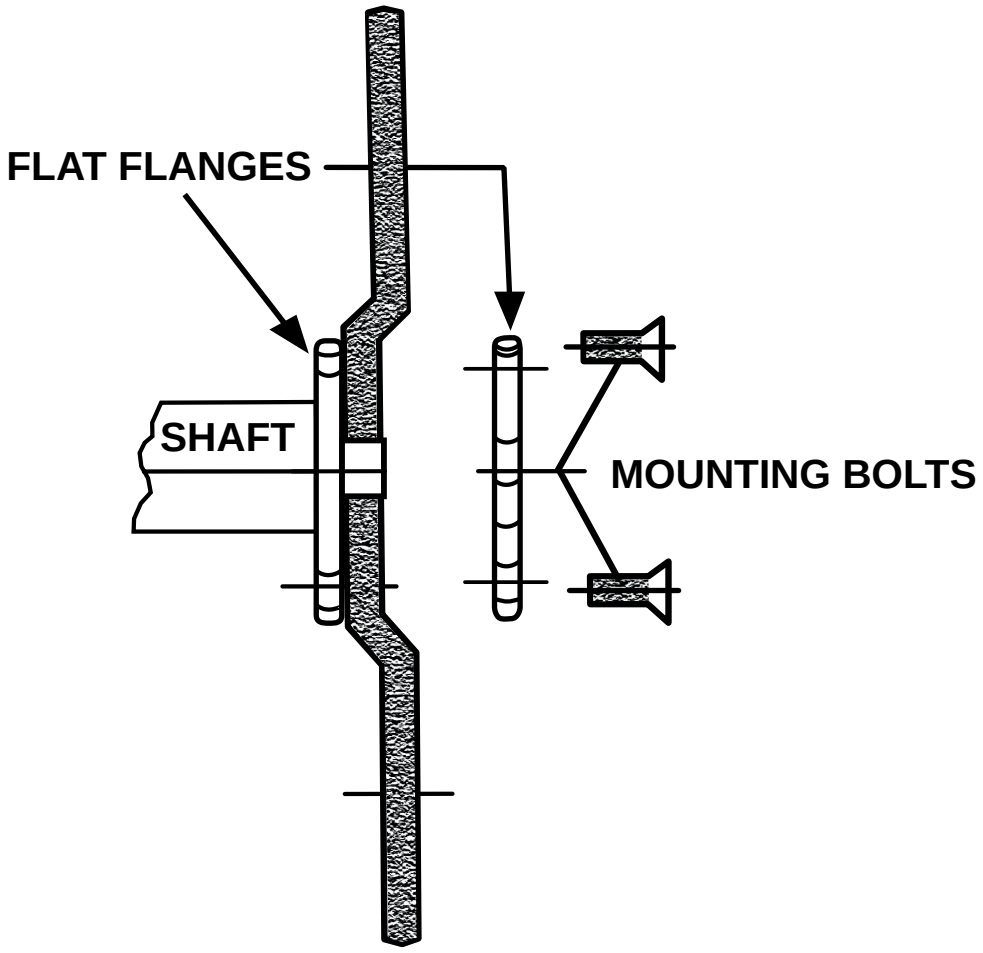

-Continued-

Abrasive Wheel Illustrations - Mounting

Use with WAC 296-807-180, Portable Tools Using Abrasive Wheels

(continued)

Mounting threaded hole wheels

Threaded hole wheels are mounted against a back flange that is:

- Flat (unrelieved)
- Securely fastened and square to the spindle axis
- Able to properly support the wheel

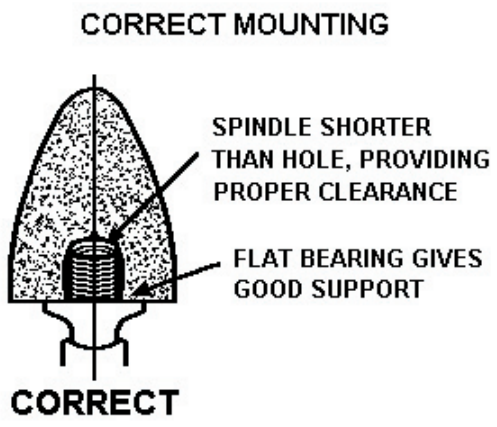

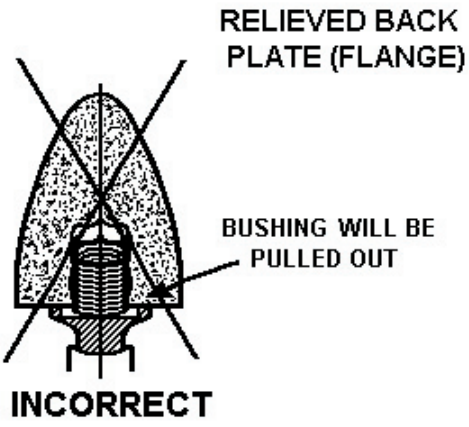

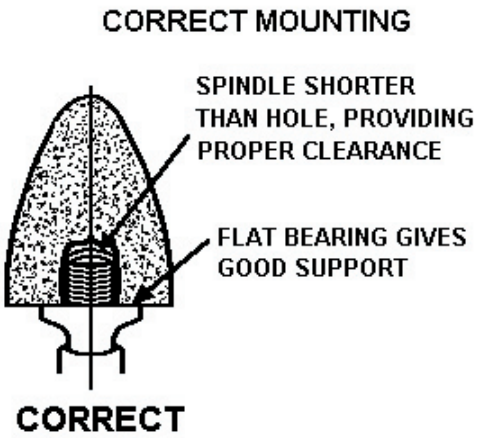

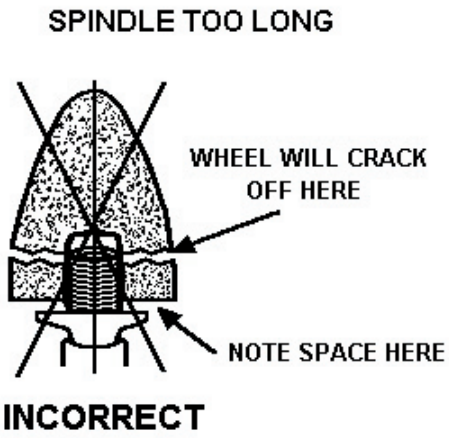

Index

A

Abrasive wheels
- angle grinders, 180-7-8
- blotters, 180-16-17
- construction, ANSI requirements, 180-4
- cup, cone and plug, 180-15
- definition, 180-1, 190-1
- exemptions, 180-1, 5, 11, 12, 16
- flanges
  - cup, cone or plug, 180-15
  - threaded hole, **180**-15
  - type 1, 180-14
  - type 27A, 180-14
- guarding, 180-5-6
  - type 1, 180-7
  - type 6 and 11, 180-7
  - type 27, 28, 29, 180-8
- mounting, 180-10, **R-** 20-21
- use, 180-9
- vertical grinders, 180-8

Airhose, compressed air tools, 140-3, 5
ANSI requirements, 140-6; 150-4; 6; 160-3; 180-4
Attachments, compressed air tools, 140-3

B

Belt sanding machines, **130**-2
Blocking, **170**-3
Blotters (see also abrasive wheels; flanges)
- definition, 190-1
- exemption, 180-16
- type 6 and 11 wheels (terrazzo), modified, 180-17

C

Chip guarding, compressed air tools, 140-4
Circular saw
- guarding requirements, table 2, 120-2
- switches, 120-2

Compressed air tools
- attachments, 140-3
- cleaning, 140-4
- connections, hose, 140-5
- construction, ANSI requirements, 140-6
- contact, 140-3
- exemptions, 140-6-7
- manufacturer's instruction, 140-3
- nailers and staplers, 140-8
- use, 140-7

Cone and plug wheels, 180-15; **R**-17
- definitions, 190-1

Construction, abrasive wheels, 180-4
Controls (see switches)
Cribbing, 170-3
Cutting-off wheels,180-14
- definition, **190**-1

D

Definitions, 190-1

F

Flanges (see also abrasive wheels; blotters)
- exemptions, 180-11
- surfaces, 180-11-13
- threaded hole, 180-15
- type 1, cutting-off, 180-14
- type 27A, cutting-off, 180-14

Fueling, lawnmowers, 160-7

H

Hydraulic jacks, 170-2

J

Jacks
- inspection, 170-4
- labeling, rated loads, 170-2
- lifting loads, 170-2-3

Portable Power Tools

Chapter 296-807 WAC

Index

L

Labeling
- jacks, 170-2
- lawnmowers, 160-4
- powder actuated fastening systems, 150-7

Lawnmowers
- construction, ANSI requirements, 160-3
- exemptions, 160-1, 7
- fueling and exhaust, 160-7
- guarding against burns, 160-4
- hazard assessment (note), 160-6, 8
- labeling, 160-4
- ride-on passengers, 160-8
- shutoff device, 160-4
- starting, 160-5
- use, 160-6
- walk-behind, footwear, 160-8

Limit of Travel, exceeding, 170-3

M

Manufacturer's instruction
- compressed air tools, 140-3
- lawnmowers, 160-5-6
- powder actuated fastening systems, 150-10-11

N

Nailers, 140-8

P

PAFS (see powder actuated fastening systems)

Personnel Protective Equipment (PPE)
- compressed air tools, 140-7
- lawnmowers, walk-behind, 160-8
- powder actuated fastening systems, 150-5

Plane of rotation, abrasive wheels, 180-7-8

Powder actuated fastening systems
- appropriate to job, 150-9
- construction, ANSI requirements, 150-4, 6
- exemptions, 150-1, 10, 12
- fasteners, 150-11-12
- Inspections and maintenance, 150-13
- labeling, 150-7
- loads
  - Identification and power levels, 150-8
  - powder, 150-9
- operators, 150-4, 10
- personal protective equipment (PPE), 150-5
- signs, 150-5
- storage,150-14
- use, 150-9-10

R

Rated loads, jacks, labeling, 170-2

S

Safeguarding, compressed air tools, 140-4

Safety guards
- exemption, 180-5-6
- mounting, 180-5
- type 27, 28, and 29 wheels, 180-8

Sanding machines, belt, 130-1-2

Saws, see circular saws

Scope, 100-1

Side handles, 180-8

Staplers, 140-8

Switches, 110-1-3

T

Terrazzo, **180**-17
- definition, 190-4

Threaded hole wheels, **180**-15
- definition, 190-4

W

Wheels (abrasive)
- definitions, 190-4-5
- flanges, 180-11-15
- Illustrations, **R**-8-21
- safety guards, 180-5-8
- types, **180**-7-8, 14-17
- (See also abrasive wheels)

Statutory Authority

296-807-100 Scope.

[Statutory Authority: RCW 49.17.010, .040, .050, and .060. 03-09-009 (Order 02-30), § 296-807-100, filed 04/04/03, effective 08/01/03.]

296-807-110 Switches (controls). Summary.

[Statutory Authority: RCW 49.17.010, .040, .050, and .060. 03-09-009 (Order 02-30), § 296-807-110, filed 04/04/03, effective 08/01/03.]

296-807-11005 Make sure switches are safe.

[Statutory Authority: RCW 49.17.010, .040, .050, and .060. 03-09-009 (Order 02-30), § 296-807-11005, filed 04/04/03, effective 08/01/03.]

296-807-120 Portable circular saws.

[Statutory Authority: RCW 49.17.010, .040, .050, and .060. 03-09-009 (Order 02-30), § 296-807-120, filed 04/04/03, effective 08/01/03.]

296-807-12005 Make sure portable circular saws are safe to use.

[Statutory Authority: RCW 49.17.010, .040, .050, and .060. 03-09-009 (Order 02-30), § 296-807-12005, filed 04/04/03, effective 08/01/03.]

296-807-130 Portable belt sanding machines.

[Statutory Authority: RCW 49.17.010, .040, .050, and .060. 03-09-009 (Order 02-30), § 296-807-130, filed 04/04/03, effective 08/01/03.]

296-807-13005 Guard portable belt sanding machines.

[Statutory Authority: RCW 49.17.010, .040, .050, and .060. 03-09-009 (Order 02-30), § 296-807-13005, filed 04/04/03, effective 08/01/03.]

296-807-140 Compressed air tools. Summary.

[Statutory Authority: RCW 49.17.010, .040, .050, and .060. 03-09-009 (Order 02-30), § 296-807-140, filed 04/04/03, effective 08/01/03.]

Portable Power Tools

Chapter 296-807 WAC

Statutory Authority

296-807-14005 Follow the manufacturer's instructions.

[Statutory Authority: RCW 49.17.010, .040, .050, and .060. 03-09-009 (Order 02-30), § 296-807-14005, filed 04/04/03, effective 08/01/03.]

296-807-14010 Prevent air tools from ejecting attachments.

[Statutory Authority: RCW 49.17.010, .040, .050, and .060. 03-09-009 (Order 02-30), § 296-807-14010, filed 04/04/03, effective 08/01/03.]

296-807-14015 Protect employees from contact with compressed air.

[Statutory Authority: RCW 49.17.010, .040, .050, and .060. 03-09-009 (Order 02-30), § 296-807-14015, filed 04/04/03, effective 08/01/03.]

296-807-14020 Make sure safeguards are used when cleaning with compressed air.

[Statutory Authority: RCW 49.17.010, .040, .050, and .060. 03-09-009 (Order 02-30), § 296-807-14020, filed 04/04/03, effective 08/01/03.]

296-807-14025 Make sure airhose and plastic pipe supplying compressed air to portable air tools are safe.

[Statutory Authority: RCW 49.17.010, .040, .050, and .060. 03-09-009 (Order 02-30), § 296-807-14025, filed 04/04/03, effective 08/01/03.]

296-807-14030 Make sure air tools are adequately designed and constructed.

[Statutory Authority: RCW 49.17.010, .040, .050, and .060. 03-09-009 (Order 02-30), § 296-807-14030, filed 04/04/03, effective 08/01/03.]

296-807-14035 Use air tools safely.

[Statutory Authority: RCW 49.17.010, .040, .050, and .060. 03-09-009 (Order 02-30), § 296-807-14035, filed 04/04/03, effective 08/01/03.]

296-807-14040 Make sure fastener driving air tools (nailers and staplers) are safe.

[Statutory Authority: RCW 49.17.010, .040, .050, and .060. 03-09-009 (Order 02-30), § 296-807-14040, filed 04/04/03, effective 08/01/03.]

296-807-150 Powder actuated fastening systems.

[Statutory Authority: RCW 49.17.010, .040, .050, and .060. 03-09-009 (Order 02-30), § 296-807-150, filed 04/04/03, effective 08/01/03.]

296-807-15005 Make sure tool operators are qualified.

[Statutory Authority: RCW 49.17.010, .040, .050, and .060. 03-09-009 (Order 02-30), § 296-807-15005, filed 04/04/03, effective 08/01/03.]

296-807-15010 Make sure employees are aware tools are in use and wear appropriate personal protective equipment.

[Statutory Authority: RCW 49.17.010, .040, .050, and .060. 03-09-009 (Order 02-30), § 296-807-15010, filed 04/04/03, effective 08/01/03.]

296-807-15015 Make sure tools are adequately designed and constructed.

[Statutory Authority: RCW 49.17.010, .040, .050, and .060. 03-09-009 (Order 02-30), § 296-807-15015, filed 04/04/03, effective 08/01/03.]

296-807-15020 Make sure tools and containers are properly labeled.

[Statutory Authority: RCW 49.17.010, .040, .050, and .060. 03-09-009 (Order 02-30), § 296-807-15020, filed 04/04/03, effective 08/01/03.]

296-807-15025 Make sure powder loads and power levels are properly identified.

[Statutory Authority: RCW 49.17.010, .040, .050, and .060. 03-09-009 (Order 02-30), § 296-807-15025, filed 04/04/03, effective 08/01/03.]

Portable Power Tools

Chapter 296-807 WAC

Statutory Authority

296-807-15030 Use proper powder loads.

[Statutory Authority: RCW 49.17.010, .040, .050, and .060. 03-09-009 (Order 02-30), § 296-807-15030, filed 04/04/03, effective 08/01/03.]

296-807-15035 Make sure the tool is appropriate to the job.

[Statutory Authority: RCW 49.17.010, .040, .050, and .060. 03-09-009 (Order 02-30), § 296-807-15035, filed 04/04/03, effective 08/01/03.]

296-807-15040 Make sure the operator uses the tool safely.

[Statutory Authority: RCW 49.17.010, .040, .050, and .060. 03-09-009 (Order 02-30), § 296-807-15040, filed 04/04/03, effective 08/01/03.]

296-807-15045 Use fasteners safely.

[Statutory Authority: RCW 49.17.010, .040, .050, and .060. 03-09-009 (Order 02-30), § 296-807-15045, filed 04/04/03, effective 08/01/03.]

296-807-15050 Inspect and maintain tools properly.

[Statutory Authority: RCW 49.17.010, .040, .050, and .060. 03-09-009 (Order 02-30), § 296-807-15050, filed 04/04/03, effective 08/01/03.]

296-807-15055 Make sure tools are stored properly.

[Statutory Authority: RCW 49.17.010, .040, .050, and .060. 03-09-009 (Order 02-30), § 296-807-15055, filed 04/04/03, effective 08/01/03.]

296-807-160 Power lawnmowers. Summary

[Statutory Authority: RCW 49.17.010, .040, .050, and .060. 03-09-009 (Order 02-30), § 296-807-160, filed 04/04/03, effective 08/01/03.]

296-807-16005 Make sure equipment meets minimum design and construction requirements.

[Statutory Authority: RCW 49.17.010, .040, .050, and .060. 03-09-009 (Order 02-30), § 296-807-16005, filed 04/04/03, effective 08/01/03. Statutory Authority: RCW 49.17.010, .040, .050, and .060. 06-05-027 (Order05-45), § 296-807-16005, filed 02/07/06, effective 04/01/06.]

296-807-16010 Make sure the equipment has the appropriate labels and decals.

[Statutory Authority: RCW 49.17.010, .040, .050, and .060. 03-09-009 (Order 02-30), § 296-807-16010, filed 04/04/03, effective 08/01/03.]

296-807-16015 Make sure the operator understands and follows instructions before starting the mower.

[Statutory Authority: RCW 49.17.010, .040, .050, and .060. 03-09-009 (Order 02-30), § 296-807-16015, filed 04/04/03, effective 08/01/03.]

296-807-16020 Use the equipment safely.

[Statutory Authority: RCW 49.17.010, .040, .050, and .060. 03-09-009 (Order 02-30), § 296-807-16020, filed 04/04/03, effective 08/01/03.]

296-807-16025 Protect employees from fuel and exhaust.

[Statutory Authority: RCW 49.17.010, .040, .050, and .060. 03-09-009 (Order 02-30), § 296-807-16025, filed 04/04/03, effective 08/01/03.]

296-807-16030 Use walk-behind mowers safely.

[Statutory Authority: RCW 49.17.010, .040, .050, and .060. 03-09-009 (Order 02-30), § 296-807-16030, filed 04/04/03, effective 08/01/03.]

296-807-16035 Use ride-on mowers safely.

[Statutory Authority: RCW 49.17.010, .040, .050, and .060. 03-09-009 (Order 02-30), § 296-807-16035, filed 04/04/03, effective 08/01/03.]

296-807-170 Jacks. Summary.

[Statutory Authority: RCW 49.17.010, .040, .050, and .060. 03-09-009 (Order 02-30), § 296-807-170, filed 04/04/03, effective 08/01/03.]

296-807-17005 Make sure jacks are labeled with their rated load(s).

[Statutory Authority: RCW 49.17.010, .040, .050, and .060. 03-09-009 (Order 02-30), § 296-807-17005, filed 04/04/03, effective 08/01/03.]

Portable Power Tools

Chapter 296-807 WAC

Statutory Authority

296-807-17010 Make sure the jack is safe to lift the load.

[Statutory Authority: RCW 49.17.010, .040, .050, and .060. 03-09-009 (Order 02-30), § 296-807-17010, filed 04/04/03, effective 08/01/03.]

296-807-17015 Life the load safely.

[Statutory Authority: RCW 49.17.010, .040, .050, and .060. 03-09-009 (Order 02-30), § 296-807-17015, filed 04/04/03, effective 08/01/03.]

296-807-17020 Visually inspect jacks and keep them in good working order.

[Statutory Authority: RCW 49.17.010, .040, .050, and .060. 03-09-009 (Order 02-30), § 296-807-17020, filed 04/04/03, effective 08/01/03.]

296-807-180 Portable tools using abrasive wheels. Summary.

[Statutory Authority: RCW 49.17.010, .040, .050, and .060. 03-09-009 (Order 02-30), § 296-807-180, filed 04/04/03, effective 08/01/03.]

296-807-18005 Make sure abrasive wheels and tools are properly designed and constructed.

[Statutory Authority: RCW 49.17.010, .040, .050, and .060. 03-09-009 (Order 02-30), § 296-807-18005, filed 04/04/03, effective 08/01/03.]

296-807-18010 Make sure machines have safety guards.

[Statutory Authority: RCW 49.17.010, .040, .050, and .060. 03-09-009 (Order 02-30), § 296-807-18010, filed 04/04/03, effective 08/01/03.]

296-807-18015 Keep safety guards in good functional condition.

[Statutory Authority: RCW 49.17.010, .040, .050, and .060. 03-09-009 (Order 02-30), § 296-807-18015, filed 04/04/03, effective 08/01/03.]

Statutory Authority

296-807-18020 Use specific safety guards for machines using Type 1 grinding wheels, cutting-off wheels, and tuck pointing wheels.

[Statutory Authority: RCW 49.17.010, .040, .050, and .060. 03-09-009 (Order 02-30), § 296-807-18020, filed 04/04/03, effective 08/01/03.]

296-807-18025 Use specific safety guards for vertical and angle grinders using Type 6 or Type 11 wheels.

[Statutory Authority: RCW 49.17.010, .040, .050, and .060. 03-09-009 (Order 02-30), § 296-807-18025, filed 04/04/03, effective 08/01/03.]

296-807-18030 Use specific safety guards for vertical and angle grinders using Type 27, 28 and 29 wheels.

[Statutory Authority: RCW 49.17.010, .040, .050, and .060. 03-09-009 (Order 02-30), § 296-807-18030, filed 04/04/03, effective 08/01/03.]

296-807-18035 Use side handles on vertical and angle grinders.

[Statutory Authority: RCW 49.17.010, .040, .050, and .060. 03-09-009 (Order 02-30), § 296-807-18035, filed 04/04/03, effective 08/01/03.]

296-807-18040 Make sure abrasive wheels are safe to use.

[Statutory Authority: RCW 49.17.010, .040, .050, and .060. 03-09-009 (Order 02-30), § 296-807-18040, filed 04/04/03, effective 08/01/03.]

296-807-18045 Mount wheels properly.

[Statutory Authority: RCW 49.17.010, .040, .050, and .060. 03-09-009 (Order 02-30), § 296-807-18045, filed 04/04/03, effective 08/01/03.]

296-807-18050 Use proper flanges.

[Statutory Authority: RCW 49.17.010, .040, .050, and .060. 03-09-009 (Order 02-30), § 296-807-18050, filed 04/04/03, effective 08/01/03.]

Statutory Authority

296-807-18055 Make sure flanges are in good condition.

[Statutory Authority: RCW 49.17.010, .040, .050, and .060. 03-09-009 (Order 02-30), § 296-807-18055, filed 04/04/03, effective 08/01/03.]

296-807-18060 Use specific flanges for Type 1 cutting-off wheels.

[Statutory Authority: RCW 49.17.010, .040, .050, and .060. 03-09-009 (Order 02-30), § 296-807-18060, filed 04/04/03, effective 08/01/03.].

296-807-18065 Use specific flanges for Type 27A cutting-off wheels.

[Statutory Authority: RCW 49.17.010, .040, .050, and .060. 03-09-009 (Order 02-30), § 296-807-18065, filed 04/04/03, effective 08/01/03.]

296-807-18070 Use specific flanges for threaded hole wheels.

[Statutory Authority: RCW 49.17.010, .040, .050, and .060. 03-09-009 (Order 02-30), § 296-807-18070, filed 04/04/03, effective 08/01/03.]

296-807-18075 Use specific flanges for cup, cone or plug wheels with threaded inserts or projecting studs.

[Statutory Authority: RCW 49.17.010, .040, .050, and .060. 03-09-009 (Order 02-30), § 296-807-18075, filed 04/04/03, effective 08/01/03.]

296-807-18080 Use blotters when required.

[Statutory Authority: RCW 49.17.010, .040, .050, and .060. 03-09-009 (Order 02-30), § 296-807-18080, filed 04/04/03, effective 08/01/03.]

296-807-18085 Meet specific blotter requirements when using modified Type 6 an 11 wheels (terrazzo).

[Statutory Authority: RCW 49.17.010, .040, .050, and .060. 03-09-009 (Order 02-30), § 296-807-18085, filed 04/04/03, effective 08/01/03.]

296-807-190 Definitions.

[Statutory Authority: RCW 49.17.010, .040, .050, and .060. 03-09-009 (Order 02-30), § 296-807-190, filed 04/04/03, effective 08/01/03.]

Portable Power Tools

Chapter 296-807 WAC

Statutory Authority