PART J-3
POWERED PLATFORMS

WAC
296-24-875 Elevating work platforms.
296-24-87505 Self propelled elevating work platforms.
296-24-87510 Boom supported elevating work platforms.
296-24-87515 Aerial lifts.
296-24-880 Power platforms for exterior building maintenance.
296-24-88005 Definitions
296-24-88010 Inspection and tests.
296-24-88015 Powered platform installations-Affected parts of buildings.
296-24-88020 Powered platform installations-Equipment.
296-24-88025 Maintenance.
296-24-88030 Operations.
296-24-88035 Personal fall protection.
296-24-88040 Appendix A-Guidelines (advisory).
296-24-88045 Appendix B-Exhibits (advisory).
296-24-88050 Appendix C-Personal fall arrest system (Part I-Mandatory; Parts II and III-Nonmandatory).
296-24-88055 Appendix D-Existing installations (Mandatory).
296-24-900 Manlifts.
296-24-90001 Definitions.
296-24-90003 General requirements.
296-24-90005 Mechanical requirements.
296-24-90007 Operating rules.
296-24-90009 Periodic inspection.

WAC 296-24-875 Elevating work Platforms.

(1) All applicable rules for design, construction, maintenance, operation, testing and use of manually propelled elevating work platforms must be in accordance with ANSI A92.3-1990.

(2) General requirements.

(a) Any manually propelled elevating work platform, when raised to its maximum working height, on level ground, must be capable of sustaining, without reaching instability, a minimum horizontal test force of fifty pounds or fifteen percent of the rated capacity, whichever is greater, applied to any point on the perimeter of the platform while the platform is carrying the rated work load.

(b) Any manually propelled elevating work platform, unless designed for such use by the manufacturer, must not be used on an inclined surface.

(c) Any work platform designed by the manufacturer to be operated on an inclined surface must also be capable of passing the stability tests outlined in (a) of this subsection while on such a surface. Procedures for maintaining stability must be clearly outlined in the special warnings section of the operating instructions and users must follow these instructions.

(d) If outriggers or stabilizers must be employed to meet the tests for stability outlined in (a) of this subsection, the operating instructions must require their use and such outriggers or stabilizers must be provided and used.

(e) The platform width must not be less than eighteen inches and must be provided with a surface to minimize slipping.

(f) The platform must be provided with a guardrail or other structure around its upper periphery and the guardrail must be at least thirty-eight inches high but no more than forty-five inches high, with a midrail approximately midway between the top rail and the platform surface.

(i) The guardrail system must be designed and constructed to withstand a load of twenty-five pounds per linear foot applied in a horizontal direction to the top rail or midrail.

(ii) The top rail or midrail must withstand a concentrated load of three hundred pounds applied vertically to the top of either rail midway between the supporting posts.

(iii) Guardrail terminal posts must withstand two hundred pounds applied in any direction at the top of the post.

(g) The platform must be provided with four-inch (nominal dimension) toeboards on all sides.

(h) Toeboards may be omitted at the access openings.

(i) The configuration of the work platform must include access for personnel to use in reaching the platform deck when it is in the lowered position.

(i) Any access system used in this way must have rungs or steps located on uniform centers not to exceed sixteen inches.

(ii) Steps or rungs must be provided with a face that minimizes slipping.

WAC 296-24-875 (Cont.)

(3) Safety factor specifications.

(a) Where the platform is supporting its rated work load by a system of wire ropes or chains, or both, the safety factor of the wire rope or chain must not be less than eight to one, based on ultimate strength.

(b) All critical components of a hydraulic or pneumatic system used in a work platform must have a bursting strength that exceeds the pressure attained when the system is subjected to the equivalent of four times the rated work load. (Critical components are those in which failure would result in a free descent.)

(c) All noncritical hydraulic components must have a bursting strength safety factor of at least two to one.

(4) Fail safe requirements.

(a) Where the elevation of the platform is accomplished by an electromechanical assembly, the system must be designed to prevent free descent in the event of a generator or power failure.

(b) Where the elevation of the platform is accomplished by a hydraulic or pneumatic cylinder assembly, the system must be so equipped as to prevent free descent in the event of failure of a hydraulic or pneumatic line.

(c) Where the platform is horizontally extendable beyond the base of the machine, the system must be so equipped as to prevent descent in the event of failure of a hydraulic or pneumatic line, wire rope, or chain.

(d) Where the elevation of the platform is accomplished by a single hoist cable, the system must be protected by a broken-cable safety device which will prevent free descent of the platform.

(e) Where the elevation of the platform is accomplished by a manual-mechanical or manual-hydraulic assembly, the considerations established above must apply.

(f) The control system must be designed so that a single malfunction in the control system will not result in unintended machine motion.

(g) Hydraulically or pneumatically actuated outriggers or stabilizers, or both, must be so constructed as to prevent their retraction in the event of failure of a hydraulic or pneumatic line.

(5) Emergency lowering means. Any work platform equipped with a powered elevating assembly must be supplied with clearly marked emergency lowering means readily accessible from ground or floor level.

(6) Guarding. Mechanical power transmission apparatus must be guarded in accordance with WAC 296-24-205, General safety and health standards.

(7) Directional controls.

(a) All directional controls must be marked for the direction they control and must be of the type which automatically returns to the “off” or the neutral position when released.

(b) Controls must be protected against inadvertent operation.

WAC 296-24-875 (Cont.)

(8) Motor requirements.

(a) Fuel lines of internal-combustion-engine-powered work platforms must be supported to minimize chafing and positioned to minimize exposure to engine exhaust heat. Liquid fuel lines must be hard lines except where isolation from vibration requires a flexible connection.

(b) LP-gas engine fuel systems must comply with the American National Standard for Storage and Handling of Liquified Petroleum Gases, ANSI/NFPA 58-1995.

(c) The exhaust system must be provided with a muffler that is positioned to minimize exposure to noise and exhaust gas of the operators and personnel located in proximity to the unit.

(9) Prevention of lateral movement. Each work platform must be provided with locking screws, floor locks, wheel-locking mechanisms, or other means of preventing unintended lateral motions while in use.

(10) Specifications display. The following information must be displayed on all work platforms in as permanent and as visible a manner as practical:

(a) Warnings, cautions, or restrictions for safe operation in accordance with American National Standard Specifications for Accident Prevention Signs, ANSI Z535.2-1991.

(b) Make, model, serial number, and manufacturer's name and address.

(c) Rated work load.

(d) Maximum platform height.

(e) Nominal voltage rating of batteries or rated voltage of AC line.

(f) Statement of the need for the operator's familiarity with the work platform before it is used.

(11) Alternative configuration statement. When a work platform is designed with alternative configurations:

(a) The manufacturer must clearly describe these alternatives, including the rated capacity in each situation.

(b) If the rated work load of a platform is the same in any designed configuration, these additional descriptions are not necessary.

(12) Insulation marking. A statement of whether or not the work platform is electrically insulated. If insulated, the level of protection and the applicable test standard must be stated in accordance with ANSI A92.2-1990.

(13) Maintenance and operating manuals requirement. An operating and maintenance manual(s) must be provided with each work platform and must contain:

(a) Descriptions, specifications, and ratings of the work platform, including the data specified in subsection (10) of this section.

(b) The maximum hydraulic and pneumatic systems pressure and the maximum voltage of the electrical systems which are part of the work platform.

(c) Instructions regarding operation and maintenance.

WAC 296-24-875 (Cont.)

(d) Replacement part(s) information.

(14) Rated load display. The rated work load must be clearly displayed at each entrance to the work platform.

(15) Management responsibilities.

(a) Employers' responsibilities must be in accordance with ANSI A92.3-1990.

(b) Only trained and authorized personnel must be permitted to operate the work platform.

(c) Work platforms that are not in safe operating condition must be removed from service until repaired.

(d) Repairs must be made by a qualified person in conformance with the manufacturer's operating and maintenance manuals.

(e) Operators must be trained in care and use before operation, care and use during operation, horizontal relocation, and additional requirements as specified in ANSI A92.3-1990.

(f) Modifications or alterations of work platforms must be made only with written permission of the manufacturer or any other equivalent entity.

[Statutory Authority: RCW 49.17.010, .040, .050. 00-08-078 (Order 99-15), § 296-24-875, filed 04/04/00, effective 07/01/00.]

WAC 296-24-87505 Self-propelled elevating work platforms.

(1) All applicable rules for design, construction, maintenance, operation, testing and use of self propelled elevating work platforms must be in accordance with ANSI A92.6-1990.

(2) Minimum rated work load.

(a) The minimum rated work load of work platforms must not be less than two hundred fifty pounds.

(b) All structural load-supporting elements of the work platform must have a structural safety factor of not less than two based on the minimum yield strength of the material.

(c) All structural load-supporting elements of the work platform that are made of nonductile material (such as cast iron and fiberglass) must have a structural safety factor of not less than five based on the minimum ultimate strength of the material.

(d) Design and stability tests must be in accordance with ANSI A92.6-1990.

(e) Each production unit on level ground must sustain a load test with a platform load at least one hundred fifty percent of the rated capacity imposed. The test must include the movement of the platform through its entire range of motion.

(3) Driving interlock.

(a) The unit must use interlock means that will prevent driving the unit unless the platform height, platform configuration, or any combination of these, are adjusted to meet the stability test requirements.

WAC 296-24-87505 (Cont.)

(b) A work platform limited in driveable height by the interlock means may be elevated and used while stationary up to the maximum platform heights at which it will maintain stability during the following static test. At the maximum platform height, on level ground, with the platform carrying the rated work load, apply a horizontal test force of one hundred fifty pounds or fifteen percent of the rated platform load (whichever is greater) at the point on the perimeter of the platform most likely to cause overturning.

(4) Platform outrigger interlocks. Where outriggers, stabilizers, or extendable axles are required to meet the side load test, interlocks must prevent the platform from being raised above the height at which these devices are required unless the required devices are extended. Interlocks must also prevent the retraction of these devices while the platform is above that level.

(5) Platform requirement.

(a) A guardrail or other structure must be provided around its upper periphery, which must be at least thirty-eight inches high but no more than forty-five inches high, a midrail, and toeboards which must be not less than four inches high (nominal dimension). Guardrail and midrail chains, or the equivalent, may be substituted across an access opening. Toeboards may be omitted at the access opening.

(b) The work platform must have a minimum width of eighteen inches. Proper access must be provided for personnel to use in reaching the platform deck when it is in the lowered position.

(c) A floor surface must be provided for both the platform and the access that will minimize slipping.

(6) System safety factors.

(a) When the platform supports its rated work load by a system of wire ropes or chains, or both, the safety factor of the wire rope or chains must not be less than eight to one, based on ultimate strength.

(b) All critical hydraulic components, all pneumatic components, and all hoses of hydraulic or pneumatic systems must have a minimum bursting strength of at least four times the operating pressure for which the system is designed.

(c) Noncritical hydraulic components must have a minimum bursting strength of at least twice the operating pressure for which the system is designed.

(7) Safety design requirements.

(a) Where the elevation of the platform is accomplished by an electromechanical assembly, the system must be designed to prevent free descent in the event of a generator or power failure.

(b) Where the elevation of the platform is accomplished by a hydraulic or pneumatic cylinder assembly, the system must be so equipped as to prevent free descent in the event of a hydraulic or pneumatic line failure.

(c) Where the platform is horizontally extendable beyond the base of the machine, the system must be so equipped as to prevent descent in the event of a hydraulic or pneumatic line failure.

(d) Where the elevation of the platform is accomplished by a single hoist cable, the system must be protected by a broken-cable safety device that will prevent free descent of the platform.

WAC 296-24-87505 (Cont.)

(e) In addition to the primary operator controls, the work platform must be equipped with an emergency stop device located at the primary control station that will deactivate all powered functions.

(f) Hydraulically or pneumatically actuated outriggers or stabilizers, or both, must be designed to prevent their retraction in the event of a hydraulic or pneumatic line failure.

(g) Any work platform equipped with a powered elevating assembly must be supplied with clearly marked emergency lowering means readily accessible from ground level.

(h) Mechanical power transmission apparatus must be guarded in accordance with WAC 296-24-205, General safety and health standards.

(8) Directional controls.

(a) Directional controls must move in the direction of the function they control. The controls must be of the type that automatically return to the off or the neutral position when released.

(b) Such controls must be protected against inadvertent operation and must be clearly marked.

(9) Engine requirement.

(a) Fuel lines of internal-combustion-engine-powered work platforms must be supported to keep chafing to a minimum. They must be located to keep exposure to engine and exhaust heat to a minimum.

(b) Liquid fuel lines must be hard except where flexible connections are required for isolation from vibration.

(c) LP gas fuel systems must use flexible LP gas hose or hard lines.

(d) Exhaust lines must be equipped with mufflers. The lines must be located to minimize the exposure of noise and fumes to operators and personnel near the units.

(10) Each work platform must be equipped with a mechanical parking brake, which will hold the unit on any slope it is capable of climbing. Wheel chocks must be installed before using an aerial lift on an incline, provided they can be safely installed.

(11) Specifications display. The following information must be displayed on all work platforms in a clearly visible, accessible area and in as permanent a manner as possible:

(a) Warnings, cautions, or restrictions for safe operation in accordance with ANSI Z535.2-1991.

(b) Make, model, serial number, and manufacturer's name and address.

(c) Rated work load.

(d) Maximum platform height.

(e) Nominal voltage of the batteries if battery powered.

(f) A notice to study the operating/maintenance manual before using the equipment.

WAC 296-24-87505 (Cont.)

(g) Alternative configuration statement. If a work platform is susceptible to several alternative configurations, then the manufacturer must clearly describe these alternatives, including the rated capacity in each situation. If the rated work load of a work platform is the same in any configuration, these additional descriptions are not necessary.

(h) A clear statement of whether or not the platform and its enclosure are electrically insulated. If insulated, the level of protection and the applicable test standard must be stated, in accordance with ANSI 92.2-1990.

(i) The rated work load must be clearly displayed at each entrance to the platform.

(12) Lift manual requirement. Each work platform must be provided with an appropriate manual. The manual must contain:

(a) Descriptions, specifications, and ratings of the work platform, including the data specified in subsection (11)(h) and (i) of this section.

(b) The maximum system pressure and the maximum voltage of the electrical systems that are part of the work platform.

(c) Instructions regarding operation, maintenance, and weld specifications.

(d) Replacement parts information.

(13) Inspection and maintenance.

(a) Each work platform must be inspected, maintained, repaired and kept in proper working order in accordance with the manufacturer's maintenance and repair manuals.

(b) Any work platform not in safe operating condition must be removed from service until it is repaired.

(c) All repairs must be made by a qualified service person in conformance with the manufacturer's maintenance and repair manuals.

(14) Operator requirements. Only trained and authorized personnel must be permitted to operate the work platform. Before using the work platform, the operator must:

(a) Read and understand the manufacturer's operating instructions and safety rules, and be trained by a qualified person on the contents of the manufacturer's instructions and safety rules.

(b) Read and understand all decals, warnings, and instructions on the work platform.

(c) On a daily basis, before the work platform is used, it must be given a thorough inspection, which must include:

(i) Inspection for defects such as cracked welds, hydraulic leaks, damaged control cable, loose wire connections, and tire damage.

(ii) Inspection of functional controls for proper operation.

WAC 296-24-87505 (Cont.)

(d) Any suspect items discovered through inspection must be carefully examined and a determination made by a qualified service person as to whether they constitute a safety hazard. All unsafe items must be corrected before further use of the work platform.

(e) Before the work platform is used, the operator must survey the area for hazards such as:

(i) Untamped earth fills.

(ii) Ditches.

(iii) Dropoffs or holes.

(iv) Bumps and floor obstructions.

(v) Debris.

(vi) Overhead obstructions and high-voltage conductors.

(vii) Other possible hazardous conditions.

(15) Requirement for operations. The work platform must be used only in accordance with the Manufacturer's Operating Instructions and Safety Rules, ANSI A92.6-1990, and this standard.

(a) Only trained and authorized personnel must be permitted to operate the work platform.

(b) Before each elevation of the work platform, the operator must:

(i) Check for overhead obstructions and high-voltage conductors. A minimum distance of ten feet from energized high-voltage conductors must be maintained at all times between the conductors and the operator and platform equipment.

(ii) Ensure that the work platform is elevated only on a firm and level surface.

(iii) Ensure that the load and its distribution on the platform are in accordance with the manufacturer's rated capacity. The manufacturer's recommended load limits must never be exceeded.

(iv) Ensure that outriggers and stabilizers are used if the manufacturer's instructions require their use.

(v) Ensure that guardrails are properly installed, and gates or openings are closed.

(c) Before and during driving while the platform is elevated, the operator must:

(i) Be required to look in the direction of, and keep a clear view of, the path of travel and assure that the path of travel is firm and level.

(ii) Maintain a safe distance from obstacles, debris, dropoffs, holes, depressions, ramps, or other hazards to safe elevated travel.

(iii) Maintain a safe distance from overhead obstacles.

WAC 296-24-87505 (Cont.)

(d) The operator must limit travel speed according to conditions. Conditions to be observed are: Ground surface, congestion, slope, location of personnel, and other factors that may create a hazard of collision or injury to personnel.

(e) Stunt driving and horseplay must not be permitted.

(f) Personnel must maintain a firm footing on the platform while working thereon unless they are secured by safety harness and lanyard devices fixed to manufacturer-approved hard points. Use of railings or planks, ladders or any other device on the work platform for achieving additional height must be prohibited.

(g) The operator must immediately report defects or malfunctions which become evident during operation and must stop use of the work platform until correction has been made.

(h) Altering or disabling of safety devices or interlocks must be prohibited.

(i) Care must be taken to prevent ropes, electric cords, hoses, etc., from tangling with the work platform when the platform is being elevated, lowered, or moved.

(j) Work platform rated capacities must not be exceeded when loads are transferred to the platform at elevated heights.

(k) The operator must ensure that the area surrounding the work platform is clear of personnel and equipment before lowering the platform.

(16) Fuel tanks must not be filled while the engine is running. Spillage must be avoided.

(17) Batteries must not be charged except in an open, well-ventilated area, free of flame, smoking, spark, or fire.

(18) Modifications. All modifications and alterations to work platforms must be certified in writing as being in conformance with ANSI A92.6-1990 by the manufacturer or any equivalent entity, such as a nationally recognized testing laboratory.

[Statutory Authority: RCW 49.17.010, .040, .050. 00-08-078 (Order 99-15), § 296-24-87505, filed 04/04/00, effective 07/01/00.]

WAC 296-24-87510 Boom supported elevating work platforms.

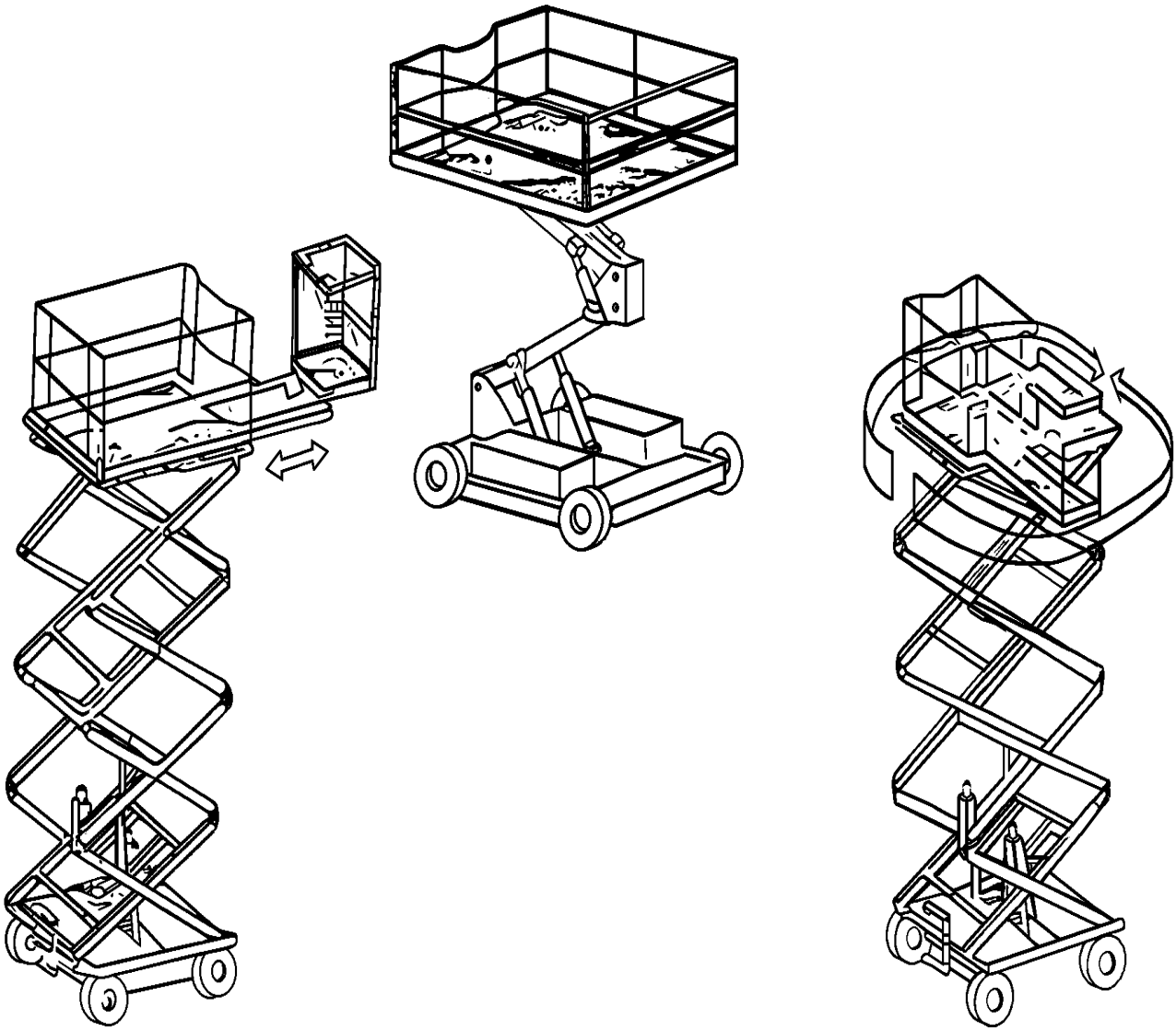

Fig. 1
Examples of Work Platforms

(1) All applicable rules for design, construction, maintenance, operation, testing and use of boom supported elevating work platforms must be in accordance with ANSI A92.5-1992.

(2) Minimum rated work load. The minimum rated work load of a work platform must be three hundred pounds. Either single or multiple ratings may be used.

(a) Work platforms with single ratings must include means which clearly present the rated work load to the operator at the platform control station.

(b) Work platforms having multiple configurations with multiple ratings must have means which clearly describe the rated work load of each configuration to the operator at the platform control station. Examples of multiple configurations are:

WAC 296-24-87510 (Cont.)

(i) Outriggers extended to firm footing versus outriggers not extended.

(ii) Large platform versus small platform.

(iii) Extendable boom retracted versus extended.

(iv) Boom elevated versus lowered.

(v) Extendable axles extended versus retracted.

(3) Boom angle indicator: When the rated capacity of the alternate configuration depends on the angle the boom makes with the horizontal, the manufacturer must install means by which that angle can be determined. Such means must be clearly displayed to the operator at the platform control station.

(4) Structural safety.

(a) All load-supporting structural elements of the work platform must have a structural safety factor of not less than two to one based on the minimum yield strength of the materials used.

(b) The load-supporting structural elements of the work platform that are made of nonductile material which will not deform plastically before breaking must have a structural safety factor of not less than five to one based on the minimum ultimate strength of the materials used.

(c) The design stress used in determining the structural safety factor must be the maximum stresses developed within the element with the machine operating at its rated work load, used in the type of service for which it was designed, and operated in accordance with manufacturer's operation instructions.

(d) The design stress must include the effects of stress concentration and dynamic loading as shown in ANSI A92.5-1992.

(5) Platform stability.

(a) Each work platform must be capable of maintaining stability while sustaining a static load equal to one and one-third times its rated work load, concentrated anywhere twelve inches inside the perimeter of the platform, throughout its entire range of motion while on a slope of five degrees from the horizontal in the direction most likely to cause overturning.

(i) If having the outriggers, stabilizers, or extendable axles in contact with the supporting surface is part of the normal configuration to meet the stability requirements, they must be extended.

(ii) A visual inspection must be made to determine whether this test has produced an adverse effect on any component.

(b) Each work platform must sustain on level ground a test load equal to one and one-half times its rated work load throughout the entire range of motion in which the boom can be placed.

(i) The test load must be placed with its center of gravity twelve inches inboard from the guardrail while the unit is in the least stable position.

(ii) The work platform must remain stable during this test.

WAC 296-24-87510 (Cont.)

(iii) A visual inspection must be made to determine whether this test has produced an adverse effect on any component.

(c) Each work platform must be capable of maintaining stability when positioned on a five degree slope in its backward stability configuration in the direction and condition most likely to cause overturning, while sustaining a horizontal force of one hundred fifty pounds or fifteen percent of rated capacity, whichever is greater, applied to the upper perimeter of the platform in the direction most likely to cause overturning (see Fig. 1). Note that the most adverse condition may be with zero or with rated work load (concentrated one foot inside perimeter of platform), depending on basket configuration.

(i) If having the outriggers, stabilizers, or extendable axles in contact with the supporting surface is part of the normal configuration to meet stability requirements, they must be extended.

(ii) A visual inspection must be made to determine whether this test has produced an adverse effect on any component.

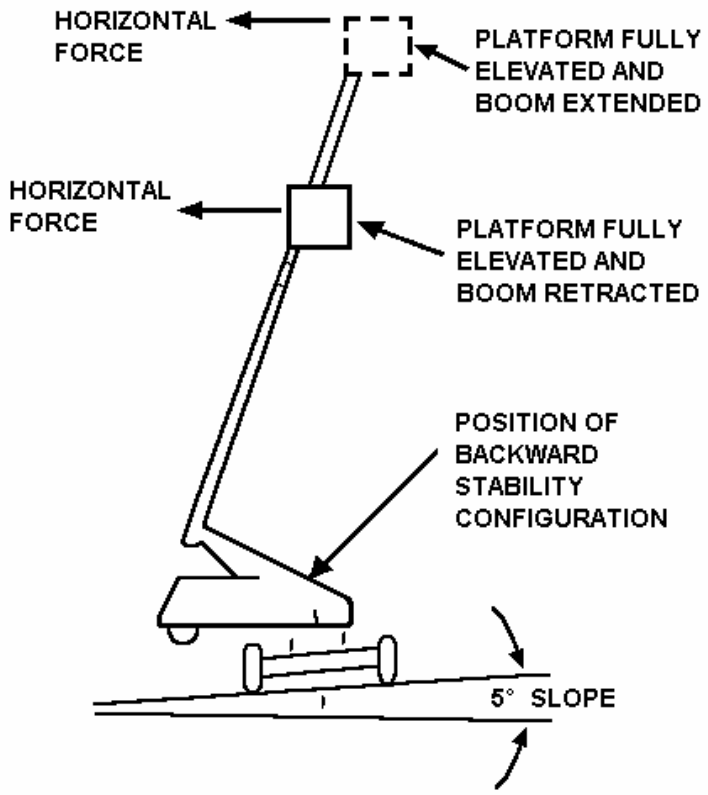

WAC 296-24-87510 (Cont.)

(6) Work platform design requirement. The work platform must be provided with a guardrail or other structure at least thirty-eight inches high but no more than forty-five inches high around its upper periphery, with a midrail, and with toeboards not less than four inches high. Guardrails and midrail chains or the equivalent may be substituted across an access opening.

(a) All stepping, standing, and working surfaces must be skid resistant.

(b) Attachment points must be provided for a full body harness and lanyard for each person occupying the platform.

(7) Work platform controls. Work platforms must have both primary and secondary controls.

(a) Primary controls must be readily accessible to the operator on the platform.

(b) Secondary controls must be designed to override the primary controls and must be readily accessible from ground level.

(c) Both primary and secondary controls must be clearly marked, using permanent legible identification which can be easily understood.

(d) All directional controls must move in the direction of the function which they control when possible, and must be of the type which automatically returns to the “off” or the neutral position when released.

(e) Such controls must be protected against inadvertent operation.

(8) Outrigger interlocks. Where the work platform is equipped with outriggers, stabilizers, or extendable axles, interlocks must be provided to ensure that the platform cannot be positioned beyond the maximum travel height unless the outriggers, stabilizers, or extendable axles are properly set. Control circuits must ensure that the driving motor(s) cannot be activated unless the outriggers or stabilizers are disengaged and the platform has been lowered to the maximum travel height (MTH).

(9) Auxiliary operating means: All work platforms must be provided with an auxiliary means of lowering, retracting, and rotating in the event of primary power loss.

(10) Emergency stop: All work platforms must be equipped with an emergency stop device, readily accessible to the operator, which will effectively de-energize all powered systems in case of a malfunction.

(11) Tilt alarm: All work platforms must be fitted with an alarm or other suitable warning at the platform, which will be activated automatically when the machine base is more than five degrees out of level in any direction.

(12) System safety factors.

(a) Where the platform is supporting its rated work load by a system of wire ropes or lift chains, or both, the safety factor of the wire rope or chain must not be less than eight to one, based on ultimate strength.

(b) All critical components and hoses of hydraulic and pneumatic systems must have a minimum bursting strength of four times the operating pressure for which the system is designed.

(c) Noncritical components must have a minimum bursting strength of two times the operating pressure for which the system is designed.

WAC 296-24-87510 (Cont.)

(d) Critical components are defined as those in which a malfunction would result in a free descent of the platform.

(13) Failsafe requirements.

(a) Where the elevation of the platform is accomplished by an electromechanical assembly, the system must be so designed as to prevent free descent in the event of a generator or power failure.

(b) Where the elevation of the platform is accomplished by a hydraulic or pneumatic cylinder assembly, the system must be so equipped as to prevent free descent in the event a hydraulic or pneumatic line bursts.

(c) Hydraulically or pneumatically actuated outriggers or stabilizers, or both, must be so designed as to prevent their retraction in the event a hydraulic or pneumatic line bursts.

(14) Engine requirement.

(a) Fuel lines of internal-combustion-engine-powered work platforms must be supported to keep chafing to a minimum and located to keep exposure to engine and exhaust heat to a minimum.

(b) Liquid fuel lines must be hard except where flexible connections are required for isolation from vibration.

(c) LP gas fuel systems must use flexible LP gas hose or hard lines.

(d) Exhaust lines must be equipped with mufflers and must be located to minimize the exposure to noise and fumes of operators and personnel located in the proximity of such units.

(15) Specifications display. There must be displayed on all work platforms, in a permanent manner, at a readily visible location, the following information:

(a) Special warnings, cautions, or restrictions necessary for safe operation in accordance with ANSI Z535.2-1991.

(b) Make, model, serial number, and manufacturer's name and address.

(c) Rated work load.

(d) Maximum platform height and maximum travel height.

(e) Reference to studying operating instructions in manual before use.

(f) Alternative configuration statement. If a work platform is capable of several alternative configurations and loads, the alternatives must be clearly described.

(g) A clear statement of whether or not the platform and its enclosure are electrically insulated. If they are electrically insulated, the voltage at which the platform is rated and the applicable test standard must be stated.

(h) The rated work load must be clearly displayed at each entrance to the platform and the operator control station.

WAC 296-24-87510 (Cont.)

(16) Lift manual requirements. Each work platform must be provided with a manufacturer's manual(s) containing the following information:

(a) Descriptions, specifications, and ratings of the work platform, including the data specified in subsection (17) of this section.

(b) The maximum hydraulic operating pressure and the maximum voltage of the electrical systems which are part of the platform.

(c) Instructions regarding operation, safety rules, maintenance, and repair.

(d) Replacement parts information.

(17) Inspection and maintenance.

(a) Each work platform must be inspected, maintained, repaired, and kept in proper working condition in accordance with the manufacturer's maintenance and repair manuals.

(b) Any work platform found not to be in safe operating condition must be removed from service until repaired.

(c) All repairs must be made by a qualified person in conformance with the manufacturer's maintenance and repair manual(s).

(18) Operator requirements. Only trained and authorized persons must be permitted to operate the work platform. Before using the work platform, the operator must:

(a) Be instructed by a qualified person in the intended purpose and function of each of the controls.

(b) Read and understand the manufacturer's operating instructions and safety rules, or be trained by a qualified person on the contents of the manufacturer's operating instructions and safety rules.

(c) Understand by reading or by having a qualified person explain all decals, warnings, and instructions displayed on the work platform.

(d) Prior to use on each work shift, the work platform must be inspected for defects that would affect its safe operation and use. The inspection must consist of the following:

(i) Visual inspection for cracked welds or other structural defects, hydraulic leaks, damaged control cables, loose wire connections, and tire damage.

(ii) Function test of the operating controls to ensure that they perform their intended functions. Any suspect items must be carefully examined and a determination made by a qualified person as to whether they constitute a safety hazard. All unsafe items must be corrected before further use of the work platform.

(iii) Before the work platform is used and during use, the job site must be checked for hazards such as ditches, dropoffs or holes, bumps and floor obstructions, debris, overhead obstructions and high-voltage conductors, and other possible hazardous conditions.

(19) Requirements for operation. The work platform must be used only in accordance with the manufacturer's operating instructions and safety rules, ANSI 92.6-1990 and this standard.

WAC 296-24-87510 (Cont.)

(a) Only trained and authorized personnel must be permitted to operate the work platform.

(b) Before each elevation of the work platform, the operator must:

(i) Check for overhead obstructions and high-voltage conductors. A minimum distance of ten feet from energized high-voltage conductors must be maintained at all times between the conductors and the operator and platform equipment.

(ii) Ensure the work platform is elevated only on a firm and level surface.

(iii) Ensure that the load and its distribution on the platform are in accordance with the manufacturer's rated capacity. The manufacturer's rated work load must never be exceeded.

(iv) Ensure that outriggers or stabilizers are used in accordance with manufacturer's instructions. Wheel chocks must be installed before using an aerial lift on an incline, provided they can be safely installed.

(v) Ensure that platform guardrails are properly installed and gates or openings are closed.

(vi) Check to see that all occupants' full body harnesses are on and properly attached.

(c) Before and during driving while elevated, the operator must:

(i) Be required to look in the direction of, and keep a clear view of, the path of travel and make sure that the path is firm and level.

(ii) Maintain a safe distance from obstacles, debris, dropoffs, holes, depressions, ramps, and other hazards to safe elevated travel.

(iii) Maintain a safe distance from overhead obstacles.

(d) Under all travel conditions the operator must limit speed according to conditions of ground surface, congestion, slope, location of personnel, and other factors which may create a hazard of collision or injury to personnel.

(e) Stunt driving and horseplay must not be permitted.

(f) Personnel must maintain a firm footing on the platform while working thereon. Safety harness and lanyard devices fixed to attachment points provided and approved by the manufacturer must be used by all occupants. Use of railings, planks, ladders, or any other device on the work platform for achieving additional height must be prohibited.

(g) The operators must immediately report to their supervisor any defects or malfunctions which become evident during operation. Any defects or malfunctions that affect the safety of operation must be repaired prior to continued use of the work platform.

(h) Altering, modifying, or disabling safety devices or interlocks is prohibited.

(i) Care must be taken to prevent ropes, electric cords, hoses, and the like from becoming entangled in the work platform when it is being elevated, lowered, or moved.

WAC 296-24-87510 (Cont.)

(j) Work platform rated capacities must not be exceeded when live loads are transferred to the platform at elevated heights.

(k) The operator must ensure that the area surrounding the work platform is clear of personnel and equipment before lowering the platform.

(20) Refueling: Fuel tanks must not be filled while the engine is running. Caution must be used while filling tanks to avoid spilling fuel.

(21) Battery charging: Batteries must not be charged except in an open, well ventilated area free of flame, smoking, spark, and fire.

(22) Modifications: There must be no modification or alteration to work platforms without the modifications being approved and certified in writing by the manufacturer or other equivalent entity, such as a nationally recognized testing laboratory, to be in conformance with all applicable provisions of ANSI A92.5-1992 and this standard.

[Statutory Authority: RCW 49.17.010, .040, .050. 00-08-078 (Order 99-15), § 296-24-87510, filed 04/04/00, effective 07/01/00.]

WAC 296-24-87515 Aerial lifts.

(1) "General requirements."

(a) Unless otherwise provided in this section, aerial lifts acquired for use on or after January 22, 1973, must be designed and constructed in conformance with the applicable requirements of the American National Standards for "Vehicle Mounted Elevating and Rotating Work Platforms," ANSI A92.2-1969, including Appendix. Aerial lifts acquired before January 22, 1973, which do not meet the requirements of ANSI A92.2-1969, may not be used after January 1, 1976, unless they must have been modified so as to conform with the applicable design and construction requirements of ANSI A92.2-1969. Aerial lifts include the following types of vehicle-mounted aerial devices used to elevate personnel to job-sites above ground:

(i) Extensible boom platforms;

(ii) Aerial ladders;

(iii) Articulating boom platforms;

(iv) Vertical towers; and

(v) A combination of any such devices. Aerial equipment may be made of metal, wood, fiberglass reinforced plastic (FRP), or other material; may be powered or manually operated; and are deemed to be aerial lifts whether or not they are capable of rotating about a substantially vertical axis.

(b) Aerial lifts may be "field modified" for uses other than those intended by the manufacturer provided the modification has been certified in writing by the manufacturer or by any other equivalent entity, such as a nationally recognized testing laboratory, to be in conformity with all applicable provisions of ANSI A92.2-1969 and this section and to be at least as safe as the equipment was before modification.

(2) "Specific requirements."

(a) Ladder trucks and tower trucks:

WAC 296-24-87515 (Cont.)

(i) Aerial ladders must be secured in the lower traveling position by the locking device on top of the truck cab, and the manually operated device at the base of the ladder before the truck is moved for highway travel.

(ii) A full body harness must be worn and a lanyard attached to the ladder rail or tower when working from ladder trucks or tower trucks.

(b) Extensible and articulating boom platforms.

(i) Lift controls must be tested each day prior to use to determine that such controls are in safe working condition.

(ii) Only authorized persons must operate an aerial lift.

(iii) Belting off to an adjacent pole, structure, or equipment while working from an aerial lift must not be permitted.

(iv) Employees must always stand firmly on the floor of the basket, and must not sit or climb on the edge of the basket or use planks, ladders, or other devices for a work position.

(v) A full body harness must be worn and a lanyard attached to the boom or basket when working from an aerial lift.

(vi) Boom and basket load limits specified by the manufacturer must not be exceeded.

(vii) The brakes must be set and when outriggers are used, they must be positioned on pads or a solid surface. Wheel chocks must be installed before using an aerial lift on an incline, provided they can be safely installed.

(viii) An aerial lift truck must not be moved when the boom is elevated in a working position with workers in the basket, except for equipment which is specifically designed for this type of operation in accordance with the provisions of subsection (1)(a) and (b) of this section.

(ix) Articulating boom and extensible boom platforms, primarily designed as personnel carriers, must have both platform (upper) and lower controls. Upper controls must be in or beside the platform within easy reach of the operator. Lower controls must provide for overriding the upper controls. Controls must be plainly marked as to their function. Lower level controls must not be operated unless permission has been obtained from the employee in the lift, except in case of emergency.

(x) Climbers must not be worn while performing work from an aerial lift.

(xi) The insulated portion of an aerial lift must not be altered in any manner that might reduce its insulating value.

(xii) Before moving an aerial lift for travel, the boom(s) must be inspected to see that it is properly cradled and outriggers are in stowed position except as provided in (b)(viii) of this subsection.

WAC 296-24-87515 (Cont.)

(c) Electrical tests. All electrical tests must conform to the requirements of ANSI A92.2-1990 section 5. However equivalent d.c. voltage tests may be used in lieu of the a.c. voltage specified in ANSI A92.2-1990; d.c. voltage tests which are approved by the equipment manufacturer or equivalent entity must be considered an equivalent test for the purpose of this subsection (2)(c).

(d) Bursting safety factor. The provisions of the American National Standards Institute standard ANSI A92.2-1990, section 4.9 Bursting Safety Factor must apply to all critical hydraulic and pneumatic components. Critical components are those in which a failure would result in a free fall or free rotation of the boom. All noncritical components must have a bursting safety factor of at least 2 to 1.

(e) Welding standards. All welding must conform to the following standards as applicable:

(i) Standard Qualification Procedure, AWS B3.0-41.

(ii) Recommended Practices for Automotive Welding Design, AWS D8.4-61.

Note: Nonmandatory Appendix C to this part lists examples of national consensus standards that are considered to provide employee protection equivalent to that provided through the application of ANSI A92.2-1990, where appropriate. Copies may be obtained from the American National Standards Institute.

Statutory Authority: RCW 49.17.010, .040, .050. 00-08-078 (Order 99-15), § 296-24-87515, filed 04/04/00, effective 07/01/00.]

WAC 296-24-880 Power platforms for exterior building maintenance.

(1) Scope. This section covers powered platform installations permanently dedicated to interior or exterior building maintenance of a specific structure or group of structures. This section does not apply to suspended scaffolds (swinging scaffolds) used to service buildings on a temporary basis and covered in chapter 296-874, Scaffolds. Building maintenance includes, but is not limited to, such tasks as window cleaning, caulking, metal polishing, and reglazing.

(2) Application.

(a) New installations. This section applies to all permanent installations completed after July 23, 1990. Major modifications to existing installations completed after that date are also considered new installations under this section.

(b) Existing installations.

(i) Permanent installations in existence and/or completed before July 23, 1990, must comply with WAC 296-24-88010, 296-24-88025, 296-24-88030, 296-24-88035, and 296-24-88050.

(ii) In addition, permanent installations completed after August 27, 1971, and in existence and/or completed before July 23, 1990, must comply with WAC 296-24-88055.

(3) Assurance.

(a) Building owners of new installations must inform the employer before each use in writing that the installation meets the requirements of WAC 296-24-88015(1) and 296-24-88020(1) and the additional design criteria contained in other provisions of WAC 296-24-88015 and 296-24-88020

WAC 296-24-880 (Cont.)

relating to: Required load sustaining capabilities of platforms, building components, hoisting and supporting equipment; stability factors for carriages, platforms and supporting equipment; maximum horizontal force for movement of carriages and davits; design of carriages, hoisting machines, wire rope and stabilization systems; and design criteria for electrical wiring and equipment.

(b) Building owners must base the information required in (a) of this subsection on the results of a field test of the installation before being placed into service and following any major alteration to an existing installation, as required in WAC 296-24-88010(1). The assurance must also be based on all other relevant available information, including, but not limited to, test data, equipment specifications and verification by a registered professional engineer.

(c) Building owners of all installations, new and existing, must inform the employer in writing that the installation has been inspected, tested and maintained in compliance with the requirements of WAC 296-24-88010 and 296-24-88025 and that all protection anchorages meet the requirements of WAC 296-24-88050 (3)(j), Appendix C.

(d) The employer shall not permit employees to use the installation prior to receiving assurance from the building owner that the installation meets the requirements contained in (a) and (c) of this subsection.

[Statutory Authority: RCW 49.17.010, .040, .050. 00-08-078 (Order 99-15), § 296-24-880, filed 04/04/00, effective 07/01/00.]

WAC 296-24-88005 Definitions.

Anemometer. An instrument for measuring wind velocity.

Angulated roping. A system of platform suspension in which the upper wire rope sheaves or suspension points are closer to the plane of the building face than the corresponding attachment points on the platform, thus causing the platform to press against the face of the building during its vertical travel.

ANSI. American National Standards Institute.

Babbitted fastenings. The method of providing wire rope attachments in which the ends of the wire strands are bent back and are held in a tapered socket by means of poured molten babbitt metal.

Brake-disc type. A brake in which the holding effect is obtained by frictional resistance between one or more faces of discs keyed to the rotating member to be held and fixed discs keyed to the stationary or housing member (pressure between the discs being applied axially).

Brake-self-energizing band type. An essentially unidirectional brake in which the holding effect is obtained by the snubbing action of a flexible band wrapped about a cylindrical wheel or drum affixed to the rotating member to be held, the connections and linkages being so arranged that the motion of the brake wheel or drum will act to increase the tension or holding force of the band.

Brake-shoe type. A brake in which the holding effect is obtained by applying the direct pressure of two or more segmental friction elements held to a stationary member against a cylindrical wheel or drum affixed to the rotating member to be held.

Building face rollers. A specialized form of guide roller designed to contact a portion of the outer face or wall structure of the building, and to assist in stabilizing the operators' platform during vertical travel.

Building maintenance. Operations such as window cleaning, caulking, metal polishing, reglazing, and general maintenance on building surfaces.

WAC 296-24-88005 (Cont.)

Cable. A conductor, or group of conductors, enclosed in a weatherproof sheath, that may be used to supply electrical power and/or control current for equipment or to provide voice communication circuits.

Carriage. A wheeled vehicle used for the horizontal movement and support of other equipment.

Certification. A written, signed, and dated statement confirming the performance of a requirement of this section.

Combination cable. A cable having both steel structural members capable of supporting the platform, and copper or other electrical conductors insulated from each other and the structural members by nonconducive barriers.

Competent person. One who is capable of identifying existing and predictable hazards in the surroundings or working conditions which are unsanitary, hazardous, or dangerous to employees, and who has authorization to take prompt corrective measures to eliminate them.

Continuous pressure. Operation by means of buttons or switches, any one of which may be used to control the movement of the working platform or roof car, only as long as the button or switch is manually maintained in the actuating position.

Control. A system governing starting, stopping, direction, acceleration, speed, and retardation of moving members.

Controller. A device or group of devices, usually contained in a single enclosure, which serves to control in some predetermined manner the apparatus to which it is connected.

Davit. A device, used singly or in pairs, for suspending a powered platform from work, storage and rigging locations on the building being serviced. Unlike outriggers, a davit reacts its operating load into a single roof socket or carriage attachment.

Electrical ground. A conducting connection between an electrical circuit or equipment and the earth, or some conducting body which serves in place of the earth.

Equivalent. Alternative designs, materials or methods to protect against a hazard which the employer can demonstrate will provide an equal or greater degree of safety for employees than the methods, materials or designs specified in the standard.

Ground rigging. A method of suspending a working platform starting from a safe surface to a point of suspension above the safe surface.

Ground rigged davit. A davit which cannot be used to raise a suspended working platform above the building face being serviced.

Guide button. A building face anchor designed to engage a guide track mounted on a platform.

Guide roller. A rotating, bearing-mounted, generally cylindrical member, operating separately or as part of a guide shoe assembly, attached to the platform, and providing rolling contact with building guideways, or other building contact members.

Guide shoe. An assembly of rollers, slide members, or the equivalent, attached as a unit to the operators' platform, and designed to engage with the building members provided for the vertical guidance of the operators' platform.

Hoisting machine. A device intended to raise and lower a suspended or supported unit.

Hoist rated load. The hoist manufacturer's maximum allowable operating load.

WAC 296-24-88005 (Cont.)

Installation. All the equipment and all affected parts of a building which are associated with the performance of building maintenance using powered platforms.

Interlock. A device actuated by the operation of some other device with which it is directly associated, to govern succeeding operations of the same or allied devices.

Intermittent stabilization. A method of platform stabilization in which the angulated suspension wire rope(s) are secured to regularly spaced building anchors.

Lanyard. A flexible line of rope, wire rope or strap which is used to secure the body harness to a deceleration device, lifeline or anchorage.

Lifeline. A component consisting of a flexible line for connection to an anchorage at one end to hang vertically (vertical lifeline), or for connection to anchorages at both ends to stretch horizontally (horizontal lifeline), and which serves as a means for connecting other components of a personal fall arrest system to the anchorage.

Live load. The total static weight of workers, tools, parts, and supplies that the equipment is designed to support.

Obstruction detector. A control that will stop the suspended or supported unit in the direction of travel if an obstruction is encountered, and will allow the unit to move only in a direction away from the obstruction.

Operating control. A mechanism regulating or guiding the operation of equipment that ensures a specific operating mode.

Operating device. A pushbutton, lever, or other manual device used to actuate a control.

Outrigger. A device, used singly or in pairs, for suspending a working platform from work, storage, and rigging locations on the building being serviced. Unlike davits, an outrigger reacts its operating moment load as at least two opposing vertical components acting into two or more distinct roof points and/or attachments.

Platform rated load. The combined weight of workers, tools, equipment and other material which is permitted to be carried by the working platform at the installation, as stated on the load rating plate.

Poured socket. The method of providing wire rope terminations in which the ends of the rope are held in a tapered socket by means of poured spelter or resins.

Powered platform. Equipment to provide access to the exterior of a building for maintenance, consisting of a suspended power-operated working platform, a roof car, or other suspension means, and the requisite operating and control devices.

Primary brake. A brake designed to be applied automatically whenever power to the prime mover is interrupted or discontinued.

Prime mover. The source of mechanical power for a machine.

Rated load. The manufacturer's specified maximum load to be lifted by a hoist or to be applied to a scaffold or scaffold component.

Rated strength. The strength of wire rope, as designated by its manufacturer or vendor, based on standard testing procedures or acceptable engineering design practices.

WAC 296-24-88005 (Cont.)

Rated working load. The combined static weight of workers, materials, and suspended or supported equipment.

Registered professional engineer. A person who has been duly and currently registered and licensed by an authority within the United States or its territories to practice the profession of engineering.

Relay, direction. An electrically energized contactor responsive to an initiating control circuit, which in turn causes a moving member to travel in a particular direction.

Relay, potential for vertical travel. An electrically energized contactor responsive to initiating control circuit, which in turn controls the operation of a moving member in both directions. This relay usually operates in conjunction with direction relays, as covered under the definition "relay direction."

Roof car. A structure for the suspension of a working platform, providing for its horizontal movement to working positions.

Roof-powered platform. A powered platform having the raising and lowering mechanism located on a roof car.

Roof rigged davit. A davit used to raise the suspended working platform above the building face being serviced. This type of davit can also be used to raise a suspended working platform which has been ground-rigged.

Rope. The equipment used to suspend a component of an equipment installation, i.e., wire rope.

Safe surface. A horizontal surface intended to be occupied by personnel, which is so protected by a fall protection system that it can be reasonably assured that said occupants will be protected against falls.

Secondary brake. A brake designed to arrest the descent of the suspended or supported equipment in the event of an overspeed condition.

Self-powered platform. A powered platform having the raising and lowering mechanism located on the working platform.

Speed reducer. A positive type speed reducing machine.

Stability factor. The ratio of the stabilizing moment to the overturning moment.

Stabilizer tie. A flexible line connecting the building anchor and the suspension wire rope supporting the platform.

Supported equipment. Building maintenance equipment that is held or moved to its working position by means of attachment directly to the building or extensions of the building being maintained.

Suspended equipment. Building maintenance equipment that is suspended and raised or lowered to its working position by means of ropes or combination cables attached to some anchorage above the equipment.

Suspended scaffold (swinging scaffold). A scaffold supported on wire or other ropes, used for work on, or for providing access to, vertical sides of structures on a temporary basis. Such scaffold is not designed for use on a specific structure or group of structures.

Tail line. The nonsupporting end of the wire rope used to suspend the platform.

Tie-in guides. The portion of a building that provides continuous positive engagement between the building and a suspended or supported unit during its vertical travel on the face of the building.

WAC 296-24-88005 (Cont.)

Traction hoist. A type of hoisting machine that does not accumulate the suspension wire rope on the hoisting drum or sheave, and is designed to raise and lower a suspended load by the application of friction forces between the suspension wire rope and the drum or sheave.

Transportable outriggers. Outriggers designed to be moved from one work location to another.

Traveling cable. A cable made up of electrical or communication conductors or both, and providing electrical connection between the working platform and the roof car or other fixed point.

Trolley carriage. A carriage suspended from an overhead track structure.

Verified. Accepted by design, evaluation, or inspection by a registered professional engineer.

Weatherproof. Equipment so constructed or protected that exposure to the weather will not interfere with its proper operation.

Winding drum hoist. A type of hoisting machine that accumulates the suspension wire rope on the hoisting drum.

Working platform. The suspended or supported equipment intended to provide access to the face of the building and manned by persons engaged in building maintenance.

Wrap. One complete turn of the suspension wire rope around the surface of a hoist drum.

Yield point. The stress at which the material exhibits a permanent set of 0.2 percent.

Zinced fastenings. The method of providing wire rope attachments in which the splayed or fanned wire ends are held in a tapered socket by means of poured molten zinc.
[Statutory Authority: RCW 49.17.010, .040, .050. 00-08-078 (Order 99-15), § 296-24-88005, filed 04/04/00, effective 07/01/00.]

WAC 296-24-88010 Inspections and tests.

(1) Installations and alterations. All completed building maintenance equipment installations must be inspected and tested in the field before being placed in initial service to determine that all parts of the installation conform to applicable requirements of this standard, and that all safety and operating equipment is functioning as required. A similar inspection and test must be made following any major alteration to an existing installation. No hoist in an installation must be subjected to a load in excess of 125 percent of its rated load.

(2) Periodic inspections and tests.

(a) Related building supporting structures must undergo periodic inspection by a competent person at intervals not exceeding 12 months.

(b) All parts of the equipment including control systems must be inspected, and, where necessary, tested by a competent person at intervals specified by the manufacturer/supplier, but not to exceed 12 months, to determine that they are in safe operating condition. Parts subject to wear, such as wire ropes, bearings, gears, and governors must be inspected and/or tested to determine that they have not worn to such an extent as to affect the safe operation of the installation.

WAC 296-24-88010 (Cont.)

(c) The building owner must keep a certification record of each inspection and test required under (a) and (b) of this subsection. The certification record must include the date of the inspection, the signature of the person who performed the inspection, and the number, or other identifier, of the building support structure and equipment which was inspected. This certification record must be kept readily available for review by the director or an authorized representative and by the employer.

(d) Working platforms and their components must be inspected by the employer for visible defects before every use and after each occurrence which could affect the platform's structural integrity.

(3) Maintenance, inspections and tests.

(a) A maintenance inspection and, where necessary, a test must be made of each platform installation every 30 days, or where the work cycle is less than 30 days such inspection and/or test must be made prior to each work cycle. This inspection and test must follow procedures recommended by the manufacturer, and must be made by a competent person.

(b) The building owner must keep a certification record of each inspection and test performed under (a) of this subsection. The certification record must include the date of the inspection and test, the signature of the person who performed the inspection and/or test, and an identifier for the platform installation which was inspected. The certification record must be kept readily available for review by the director or an authorized representative and by the employer.

(4) Special inspection of governors and secondary brakes.

(a) Governors and secondary brakes must be inspected and tested at intervals specified by the manufacturer/supplier but not to exceed every 12 months.

(b) The results of the inspection and test must confirm that the initiating device for the secondary braking system operates at the proper overspeed.

(c) The results of the inspection and test must confirm that the secondary brake is functioning properly.

(d) If any hoisting machine or initiating device for the secondary brake system is removed from the equipment for testing, all reinstalled and directly related components must be reinspected prior to returning the equipment installation to service.

(e) Inspection of governors and secondary brakes must be performed by a competent person.

(f) The secondary brake governor and actuation device must be tested before each day's use. Where testing is not feasible, a visual inspection of the brake must be made instead to ensure that it is free to operate.

(5) Adverse weather. The operation of powered platforms during severe adverse weather conditions is prohibited.

(6) Suspension wire rope maintenance, inspection and replacement.

(a) Suspension wire rope must be maintained and used in accordance with procedures recommended by the wire rope manufacturer.

WAC 296-24-88010 (Cont.)

(b) Suspension wire rope must be inspected by a competent person for visible defects and gross damage to the rope before every use and after each occurrence which might affect the wire rope's integrity.

(c) A thorough inspection of suspension wire ropes in service must be made once a month. Suspension wire ropes that have been inactive for 30 days or longer must have a thorough inspection before they are placed into service. These thorough inspections of suspension wire ropes must be performed by a competent person.

(d) The need for replacement of a suspension wire rope must be determined by inspection and must be based on the condition of the wire rope. Any of the following conditions or combination of conditions will be cause for removal of the wire rope:

(i) Broken wires exceeding three wires in one strand or six wires in one rope lay;

(ii) Distortion of rope structure such as would result from crushing or kinking;

(iii) Evidence of heat damage;

(iv) Evidence of rope deterioration from corrosion;

(v) A broken wire within 18 inches (460.8 mm) of the end attachments;

(vi) Noticeable rusting and pitting;

(vii) Evidence of core failure (a lengthening of rope lay, protrusion of the rope core and a reduction in rope diameter suggests core failure); or

(viii) More than one valley break (broken wire);

(ix) Outer wire wear exceeds one-third of the original outer wire diameter;

(x) Any other condition which the competent person determines has significantly affected the integrity of the rope.

(e) The building owner must keep a certification record of each monthly inspection of a suspension wire rope as required in subdivision (c) of this subsection. The record must include the date of the inspection, the signature of the person who performed the inspection, and a number, or other identifier, of the wire rope which was inspected. This record of inspection must be made available for review by the director or an authorized representative and by the employer.

(7) Hoist inspection. Before lowering personnel below the top elevation of the building, the hoist must be tested each day in the lifting direction with the intended load to make certain it has sufficient capacity to raise the personnel back to the boarding level.

[Statutory Authority: RCW 49.17.010, .040, .050. 00-08-078 (Order 99-15), § 296-24-88010, filed 04/04/00, effective 07/01/00.]

WAC 296-24-88015 Powered platform installations-Affected parts of buildings.

(1) General requirements. The following requirements apply to affected parts of buildings which utilize working platforms for building maintenance.

(a) Structural supports, tie-downs, tie-in guides, anchoring devices and any affected parts of the building included in the installation must be designed by or under the direction of a registered professional engineer experienced in such design;

WAC 296-24-88015 (Cont.)

(b) Exterior installations must be capable of withstanding prevailing climatic conditions;

(c) The building installation must provide safe access to, and egress from, the equipment and sufficient space to conduct necessary maintenance of the equipment;

(d) The affected parts of the building must have the capability of sustaining all the loads imposed by the equipment; and

(e) The affected parts of the building must be designed so as to allow the equipment to be used without exposing employees to a hazardous condition.

(2) Tie-in guides.

(a) The exterior of each building must be provided with tie-in guides unless the conditions in (b) or (c) of this subsection are met.

Note: See Figure 1 in Appendix B of this section for a description of a typical continuous stabilization system utilizing tie-in guides.

(b) If angulated roping is employed, tie-in guides required in (a) of this subsection may be eliminated for not more than 75 feet (22.9 m) of the uppermost elevation of the building, if infeasible due to exterior building design, provided an angulation force of at least 10 pounds (44.4 n) is maintained under all conditions of loading.

(c) Tie-in guides required in (a) of this subsection may be eliminated if one of the guide systems in items (i), (ii), or (iii) of this subdivision is provided, or an equivalent.

(i) Intermittent stabilization system. The system must keep the equipment in continuous contact with the building facade, and must prevent sudden horizontal movement of the platform. The system may be used together with continuous positive building guide systems using tie-in guides on the same building, provided the requirements for each system are met.

(A) The maximum vertical interval between building anchors must be 3 floors or 50 feet (15.3 m), whichever is less.

(B) Building anchors must be located vertically so that attachment of the stabilizer ties will not cause the platform suspension ropes to angulate the platform horizontally across the face of the building. The anchors must be positioned horizontally on the building face so as to be symmetrical about the platform suspension ropes.

(C) Building anchors must be easily visible to employees and must allow a stabilizer tie attachment for each of the platform suspension ropes at each vertical interval. If more than two suspension ropes are used on a platform, only the two building-side suspension ropes at the platform ends must require a stabilizer attachment.

(D) Building anchors which extend beyond the face of the building must be free of sharp edges or points. Where cables, suspension wire ropes and lifelines may be in contact with the building face, external building anchors must not interfere with their handling or operation.

WAC 296-24-88015 (Cont.)

(E) The intermittent stabilization system building anchors and components must be capable of sustaining without failure at least 4 times the maximum anticipated load applied or transmitted to the components and anchors. The minimum design wind load for each anchor must be 300 (1334 n) pounds, if 2 anchors share the wind load.

(F) The building anchors and stabilizer ties must be capable of sustaining anticipated horizontal and vertical loads from winds specified for roof storage design which may act on the platform and wire ropes if the platform is stranded on a building face. If the building anchors have different spacing than the suspension wire rope or if the building requires different suspension spacings on one platform, one building anchor and stabilizer tie must be capable of sustaining the wind loads.

Note: See Figure 2 in Appendix B of this section for a description of a typical intermittent stabilization system.

(ii) Button guide stabilization system.

(A) Guide buttons must be coordinated with platform mounted equipment of WAC 296-24-88020 (5)(f).

(B) Guide buttons must be located horizontally on the building face so as to allow engagement of each of the guide tracks mounted on the platform.

(C) Guide buttons must be located in vertical rows on the building face for proper engagement of the guide tracks mounted on the platform.

(D) Two guide buttons must engage each guide track at all times except for the initial engagement.

(E) Guide buttons which extend beyond the face of the building must be free of sharp edges or points. Where cables, ropes and lifelines may be in contact with the building face, guide buttons must not interfere with their handling or operation.

(F) Guide buttons, connections and seals must be capable of sustaining without damage at least the weight of the platform, or provision must be made in the guide tracks or guide track connectors to prevent the platform and its attachments from transmitting the weight of the platform to the guide buttons, connections and seals. In either case, the minimum design load must be 300 pounds (1334 n) per building anchor.

Note: See WAC 296-24-88020 (5)(f) for relevant equipment provisions.

Note See Figure 3 in Appendix B of this section for a description of a typical button guide stabilization system.

(iii) System utilizing angulated roping and building face rollers. The system must keep the equipment in continuous contact with the building facade, and must prevent sudden horizontal movement of the platform. This system is acceptable only where the suspended portion of the equipment in use does not exceed 130 feet (39.6 m) above a safe surface or ground level, and where the platform maintains no less than 10 pounds (44.4 n) angulation force on the building facade.

WAC 296-24-88015 (Cont.)

(d) Tie-in guides for building interiors (atriums) may be eliminated when a registered professional engineer determines that an alternative stabilization system, including systems in (c)(i), (ii), and (iii) of this subsection, or a platform tie-off at each work station will provide equivalent safety.

(3) Roof guarding.

(a) Employees working on roofs while performing building maintenance must be protected by a perimeter guarding system which meets the requirements of WAC 296-24-75007(1).

(b) The perimeter guard must not be more than 6 inches (152 mm) inboard of the inside face of a barrier, i.e. the parapet wall, or roof edge curb of the building being serviced; however, the perimeter guard location must not exceed an 18 inch (457 mm) setback from the exterior building face.

(4) Equipment stops. Operational areas for trackless type equipment must be provided with structural stops, such as curbs, to prevent equipment from traveling outside its intended travel areas and to prevent a crushing or shearing hazard.

(5) Maintenance access. Means must be provided to traverse all carriages and their suspended equipment to a safe area for maintenance and storage.

(6) Elevated track.

(a) An elevated track system which is located 4 feet (1.2 m) or more above a safe surface, and traversed by carriage supported equipment, must be provided with a walkway and guardrail system; or

(b) The working platform must be capable of being lowered, as part of its normal operation, to the lower safe surface for access and egress of the personnel and must be provided with a safe means of access and egress to the lower safe surface.

(7) Tie-down anchors. Imbedded tie-down anchors, fasteners, and affected structures must be resistant to corrosion.

(8) Cable stabilization.

(a) Hanging lifelines and all cables not in tension must be stabilized at each 200 foot (61 m) interval of vertical travel of the working platform beyond an initial 200 foot (61 m) distance.

(b) Hanging cables, other than suspended wire ropes, which are in constant tension must be stabilized when the vertical travel exceeds an initial 600 foot (183 m) distance, and at further intervals of 600 feet (183 m) or less.

(9) Emergency planning. A written emergency action plan must be developed and implemented for each kind of working platform operation. This plan must explain the emergency procedures which are to be followed in the event of a power failure, equipment failure or other emergencies which may be encountered. The plan must also include that employees be informed about the building emergency escape routes, procedures and alarm systems before operating a platform. Upon initial assignment and whenever the plan is changed the employer must review with each employee those parts of the plan which the employee must know to protect himself or herself in the event of an emergency.

WAC 296-24-88015 (Cont.)

(10) Building maintenance. Repairs or major maintenance of those building portions that provide primary support for the suspended equipment must not affect the capability of the building to meet the requirements of this standard.

(11) Electrical requirements. The following electrical requirements apply to buildings which utilize working platforms for building maintenance.

(a) General building electrical installations must comply with chapter 296-24 WAC Part L, unless otherwise specified in this section;

(b) Building electrical wiring must be of such capacity that when full load is applied to the equipment power circuit not more than a five percent drop from building service vault voltage must occur at any power circuit outlet used by equipment regulated by this section;

(c) The equipment power circuit must be an independent electrical circuit that must remain separate from all other equipment within or on the building, other than power circuits used for hand tools that will be used in conjunction with the equipment. If the building is provided with an emergency power system, the equipment power circuit may also be connected to this system;

(d) The power circuit must be provided with a disconnect switch that can be locked in the "**off**" and "**on**" positions. The switch must be conveniently located with respect to the primary operating area of the equipment to allow the operators of the equipment access to the switch;

(e) The disconnect switch for the power circuit must be locked in the "**on**" position when the equipment is in use; and

(f) An effective two-way voice communication system must be provided between the equipment operators and persons stationed within the building being serviced. The communications facility must be operable and must be manned at all times by persons stationed within the building whenever the platform is being used.

[Statutory Authority: RCW 49.17.010, .040, .050. 00-08-078 (Order 99-15), § 296-24-88015, filed 04/04/00, effective 07/01/00.]

WAC 296-24-88020 Powered platform installations-Equipment.

(1) General requirements. The following requirements apply to equipment which are part of a powered platform installation, such as platforms, stabilizing components, carriages, outriggers, davits, hoisting machines, wire ropes and electrical components.

(a) Equipment installations must be designed by or under the direction of a registered professional engineer experienced in such design;

(b) The design must provide for a minimum live load of 250 pounds (113.6 kg) for each occupant of a suspended or supported platform;

(c) Equipment that is exposed to wind when not in service must be designed to withstand forces generated by winds of at least 100 miles per hour (44.7 m/s) at 30 feet (9.2 m) above grade; and

(d) Equipment that is exposed to wind when in service must be designed to withstand forces generated by winds of at least 50 miles per hour (22.4 m/s) for all elevations.

(2) Construction requirements. Bolted connections must be self-locking or must otherwise be secured to prevent loss of the connections by vibration.

WAC 296-24-88020 (Cont.)

(3) Suspension methods. Elevated building maintenance equipment must be suspended by a carriage, outriggers, davits or an equivalent method.

(a) Carriages. Carriages used for suspension of elevated building maintenance equipment must comply with the following:

(i) The horizontal movement of a carriage must be controlled so as to ensure its safe movement and allow accurate positioning of the platform for vertical travel or storage;

(ii) Powered carriages must not exceed a traversing speed of 50 feet per minute (0.3 m/s);

(iii) The initiation of a traversing movement for a manually propelled carriage on a smooth level surface must not require a person to exert a horizontal force greater than 40 pounds (444.8 n);

(iv) Structural stops and curbs must be provided to prevent the traversing of the carriage beyond its designed limits of travel;

(v) Traversing controls for a powered carriage must be of a continuous pressure weatherproof type. Multiple controls when provided must be arranged to permit operation from only one control station at a time. An emergency stop device must be provided on each end of a powered carriage for interrupting power to the carriage drive motors;

(vi) The operating control(s) must be so connected that in the case of suspended equipment, traversing of a carriage is not possible until the suspended portion of the equipment is located at its uppermost designed position for traversing; and is free of contact with the face of the building or building guides. In addition, all protective devices and interlocks are to be in the proper position to allow traversing of the carriage;

(vii) Stability for underfoot supported carriages must be obtained by gravity, by an attachment to a structural support, or by a combination of gravity and a structural support. The use of flowing counterweights to achieve stability is prohibited.

(A) The stability factor against overturning must not be less than 2 for horizontal traversing of the carriage, including the effects of impact and wind.

(B) The carriages and their anchorages must be capable of resisting accidental over-tensioning of the wire ropes suspending the working platform, and this calculated value must include the effect of one and one-half times the stall capacity of the hoist motor. All parts of the installation must be capable of withstanding without damage to any part of the installation the forces resulting from the stall load of the hoist and one-half the wind load.

(C) Roof carriages which rely on having tie-down devices secured to the building to develop the required stability against overturning must be provided with an interlock which will prevent vertical platform movement unless the tie-down is engaged;

(viii) An automatically applied braking or locking system, or equivalent, must be provided that will prevent unintentional traversing of power-traversed or power assisted carriages;

WAC 296-24-88020 (Cont.)

(ix) A manual or automatic braking or locking system or equivalent, must be provided that will prevent unintentional traversing of manually propelled carriages;

(x) A means to lock out the power supply for the carriage must be provided;

(xi) Safe access to and egress from the carriage must be provided from a safe surface. If the carriage traverses an elevated area, any operating area on the carriage must be protected by a guardrail system in compliance with the provisions of subsection (5)(a)(vi) of this section. Any access gate must be self-closing and self-latching, or provided with an interlock;

(xii) Each carriage work station position must be identified by location markings and/or position indicators; and

(xiii) The motors must stall if the load on the hoist motors is at any time in excess of three times that necessary for lifting the working platform with its rated load.

(b) Transportable outriggers.

(i) Transportable outriggers may be used as a method of suspension for ground rigged working platforms where the point of suspension does not exceed 300 feet (91.5 m) above a safe surface. Tie-in guide system(s) must be provided which meet the requirements of WAC 296-24-88015(2).

(ii) Transportable outriggers must be used only with self-powered, ground rigged working platforms.

(iii) Each transportable outrigger must be secured with a tie-down to a verified anchorage on the building during the entire period of its use. The anchorage must be designed to have a stability factor of not less than 4 against overturning or upsetting of the outrigger.

(iv) Access to and egress from the working platform must be from and to a safe surface below the point of suspension.

(v) Each transportable outrigger must be designed for lateral stability to prevent roll-over in the event an accidental lateral load is applied to the outrigger. The accidental lateral load to be considered in this design must be not less than 70 percent of the rated load of the hoist.

(vi) Each transportable outrigger must be designed to support an ultimate load of not less than 4 times the rated load of the hoist.

(vii) Each transportable outrigger must be so located that the suspension wire ropes for two point suspended working platforms are hung parallel.

(viii) A transportable outrigger must be tied-back to a verified anchorage on the building with a rope equivalent in strength to the suspension rope.

(ix) The tie-back rope must be installed parallel to the centerline of the outrigger.

WAC 296-24-88020 (Cont.)

(c) Davits.

(i) Every davit installation, fixed or transportable, rotatable or nonrotatable must be designed and installed to insure that it has a stability factor against overturning of not less than 4.

(ii) The following requirements apply to roof rigged davit systems:

(A) Access to and egress from the working platform must be from a safe surface. Access or egress must not require persons to climb over a building's parapet or guard railing; and

(B) The working platform must be provided with wheels, casters or a carriage for traversing horizontally.

(iii) The following requirements apply to ground rigged davit systems:

(A) The point of suspension must not exceed 300 feet (91.5 m) above a safe surface. Guide system(s) must be provided which meet the requirements of WAC 296-24-88015(2);

(B) Access and egress to and from the working platform must only be from a safe surface below the point of suspension.

(iv) A rotating davit must not require a horizontal force in excess of 40 pounds (177.9 n) per person to initiate a rotating movement.

(v) The following requirements shall apply to transportable davits:

(A) A davit or part of a davit weighing more than 80 pounds (36 kg) must be provided with a means for its transport, which must keep the center of gravity of the davit at or below 36 inches (914 mm) above the safe surface during transport;

(B) A davit must be provided with a pivoting socket or with a base that will allow the insertion or removal of a davit at a position of not more than 35 degrees above the horizontal, with the complete davit inboard of the building face being serviced; and

(C) Means must be provided to lock the davit to its socket or base before it is used to suspend the platform.

(4) Hoisting machines.

(a) Raising and lowering of suspended or supported equipment must be performed only by a hoisting machine.

(b) Each hoisting machine must be capable of arresting any overspeed descent of the load.

(c) Each hoisting machine must be powered only by air, electric or hydraulic sources.

(d) Flammable liquids must not be carried on the working platform.

WAC 296-24-88020 (Cont.)

(e) Each hoisting machine must be capable of raising or lowering 125 percent of the rated load of the hoist.

(f) Moving parts of a hoisting machine must be enclosed or guarded in compliance with chapter 296-806 WAC, Machine safety.

(g) Winding drums, traction drums and sheaves and directional sheaves used in conjunction with hoisting machines must be compatible with, and sized for, the wire rope used.

(h) Each winding drum must be provided with a positive means of attaching the wire rope to the drum. The attachment must be capable of developing at least 4 times the rated load of the hoist.

(i) Each hoisting machine must be provided with a primary brake and at least one independent secondary brake, each capable of stopping and holding not less than 125 percent of the lifting capacity of the hoist.

(i) The primary brake must be directly connected to the drive train of the hoisting machine, and must not be connected through belts, chains, clutches, or set screw type devices. The brake must automatically set when power to the prime mover is interrupted.

(ii) The secondary brake must be an automatic emergency type of brake that, if actuated during each stopping cycle, must not engage before the hoist is stopped by the primary brake.

(iii) When a secondary brake is actuated, it must stop and hold the platform within a vertical distance of 24 inches (609.6 mm).

(j) Any component of a hoisting machine which requires lubrication for its protection and proper functioning must be provided with a means for that lubrication to be applied.

(5) Suspended equipment.

(a) General requirements.

(i) Each suspended unit component, except suspension ropes and guardrail systems, must be capable of supporting, without failure, at least 4 times the maximum intended live load applied or transmitted to that component.

(ii) Each suspended unit component must be constructed of materials that will withstand anticipated weather conditions.

(iii) Each suspended unit must be provided with a load rating plate, conspicuously located, stating the unit weight and rated load of the suspended unit.

(iv) When the suspension points on a suspended unit are not at the unit ends, the unit must be capable of remaining continuously stable under all conditions of use and position of the live load, and must maintain at least a 1.5 to 1 stability factor against unit upset.

(v) Guide rollers, guide shoes or building face rollers must be provided, and must compensate for variations in building dimensions and for minor horizontal out-of-level variations of each suspended unit.

WAC 296-24-88020 (Cont.)

(vi) Each working platform of a suspended unit must be secured to the building facade by one or more of the following methods, or by an equivalent method:

(A) Continuous engagement to building anchors as provided in WAC 296-24-88015 (2)(a);

(B) Intermittent engagement to building anchors as provided in WAC 296-24-88015 (2)(c)(i);

(C) Button guide engagement as provided in WAC 296-24-88015 (2)(c)(ii);

(D) Angulated roping and building face rollers as provided in WAC 296-24-88015 (2)(c)(iii).

(vii) Each working platform of a suspended unit must be provided with a guardrail system on all sides which must meet the following requirements:

(A) The system must consist of a top guardrail, midrail, and a toeboard;

(B) The top guardrail must not be less than 38 inches (950 mm) high and must be able to withstand at least a 200-pound (890 n) force in any downward or outward direction;

(C) The midrail must be able to withstand at least a 75-pound (333 n) force in any downward or outward direction; and

(D) The areas between the guardrail and toeboard on the ends and outboard side, and the area between the midrail and toeboard on the inboard side, must be closed with a material that is capable of withstanding a load of 100 pounds (45.4 KG.) applied horizontally over any area of one square foot (.09 m^2). The material must have all openings small enough to reject passage of life lines and potential falling objects which may be hazardous to persons below.

(E) Toeboards must be capable of withstanding, without failure, a force of at least 50 pounds (222 n) applied in any downward or horizontal direction at any point along the toeboard.

(F) Toeboards must be 4 inches (9 cm) minimum in length from their top edge to the level of the platform floor.

(G) Toeboards must be securely fastened in place at the outermost edge of the platform and have no more than one-half inch (1.3 cm) clearance above the platform floor.

(H) Toeboards must be solid or with an opening not over one inch (2.5 cm) in the greatest dimension.

(b) Two and four-point suspended working platforms.

(i) The working platform must be not less than 24 inches (610 mm) wide and must be provided with a minimum of a 12 inch (305 mm) wide passage at or past any obstruction on the platform.

WAC 296-24-88020 (Cont.)

(ii) The flooring must be of a slip-resistant type and must contain no opening that would allow the passage of life lines, cables and other potential falling objects. If a larger opening is provided, it must be protected by placing a material under the opening which must prevent the passage of life lines, cables and potential falling objects.

(iii) The working platform must be provided with a means of suspension that will restrict the platform's inboard to outboard roll about its longitudinal axis to a maximum of 15 degrees from a horizontal plane when moving the live load from the inboard to the outboard side of the platform.

(iv) Any cable suspended from above the platform must be provided with a means for storage to prevent accumulation of the cable on the floor of the platform.

(v) All operating controls for the vertical travel of the platform must be of the continuous-pressure type, and must be located on the platform.

(vi) Each operating station of every working platform must be provided with a means of interrupting the power supply to all hoist motors to stop any further powered ascent or descent of the platform.

(vii) The maximum rated speed of the platform must not exceed 50 feet per minute (0.3 ms) with single speed hoists, nor 75 feet per minute (0.4 ms) with multispeed hoists.

(viii) Provisions must be made for securing all tools, water tanks, and other accessories to prevent their movement or accumulation on the floor of the platform.

(ix) Portable fire extinguishers conforming to the provisions of WAC 296-24-585 and 296-24-592 must be provided and securely attached on all working platforms.

(x) Access to and egress from a working platform, except for those that land directly on a safe surface, must be provided by stairs, ladders, platforms and runways conforming to the provisions of Parts J-1 and J-2 of chapter 296-24 WAC. Access gates must be self-closing and self-latching.

(xi) Means of access to or egress from a working platform which is 48 inches (1.2 m) or more above a safe surface must be provided with a guardrail system or ladder handrails that conform to the provisions of Parts J-1 and J-2 of chapter 296-24 WAC.

(xii) The platform must be provided with a secondary wire rope suspension system if the platform contains overhead structures which restrict the emergency egress of employees. A horizontal lifeline or a direct connection anchorage must be provided, as part of a fall arrest system which meets the requirements of Appendix C, for each employee on such a platform.

(xiii) A vertical lifeline must be provided as part of a fall arrest system which meets the requirements of Appendix C, for each employee on a working platform suspended by 2 or more wire ropes, if the failure of one wire rope or suspension attachment will cause the platform to upset. If a secondary wire rope suspension is used, vertical lifelines are not required for the fall arrest system, provided that each employee is attached to a horizontal lifeline anchored to the platform.

WAC 296-24-88020 (Cont.)

(xiv) An emergency electric operating device must be provided on roof powered platforms near the hoisting machine for use in the event of failure of the normal operating device located on the working platform, or failure of the cable connected to the platform. The emergency electric operating device must be mounted in a secured compartment, and the compartment must be labeled with instructions for use. A means for opening the compartment must be mounted in a break-glass receptacle located near the emergency electric operating device or in an equipment secure and accessible location.

(c) Single point suspended working platforms.

(i) The requirements of (b)(i) through (xi) of this subsection must also apply to a single point working platform.

(ii) Each single point suspended working platform must be provided with a secondary wire rope suspension system, which will prevent the working platform from falling should there be a failure of the primary means of support, or if the platform contains overhead structures which restrict the egress of the employees. A horizontal life line or a direct connection anchorage must be provided, as part of a fall arrest system which meets the requirements of Appendix C, for each employee on the platform.

(d) Ground-rigged working platforms.

(i) Ground-rigged working platforms must comply with all the requirements of (b)(i) through (xiii) of this subsection.

(ii) After each day's use, the power supply within the building must be disconnected from a ground-rigged working platform, and the platform must be either disengaged from its suspension points or secured and stored at grade.

(e) Intermittently stabilized platforms.

(i) The platform must comply with (b)(i) through (xiii) of this subsection.

(ii) Each stabilizer tie must be equipped with a “quick connect-quick disconnect” device which cannot be accidently disengaged, for attachment to the building anchor, and must be resistant to adverse environmental conditions.

(iii) The platform must be provided with a stopping device that will interrupt the hoist power supply in the event the platform contacts a stabilizer tie during its ascent.

(iv) Building face rollers must not be placed at the anchor setting if exterior anchors are used on the building face.

(v) Stabilizer ties used on intermittently stabilized platforms must allow for the specific attachment length needed to effect the predetermined angulation of the suspended wire rope. The specific attachment length must be maintained at all building anchor locations.

(vi) The platform must be in continuous contact with the face of the building during ascent and descent.

(vii) The attachment and removal of stabilizer ties must not require the horizontal movement of the platform.

WAC 296-24-88020 (Cont.)

(viii) The platform-mounted equipment and its suspension wire ropes must not be physically damaged by the loads from the stabilizer tie or its building anchor. The platform, platform-mounted equipment and wire ropes must be able to withstand a load that is at least twice the ultimate strength of the stabilizer tie.

Note: See Figure 2 in Appendix B of this section for a description of a typical intermittent stabilization system.

(f) Button-guide stabilized platforms.

(i) The platform must comply with (b)(i) through (xiii) of this subsection.

(ii) Each guide track on the platform must engage a minimum of two guide buttons during any vertical travel of the platform following the initial button engagement.

(iii) Each guide track on a platform that is part of a roof rigged system must be provided with a storage position on the platform.

(iv) Each guide track on the platform must be sufficiently maneuverable by platform occupants to permit easy engagement of the guide buttons, and easy movement into and out of its storage position on the platform.

(v) Two guide tracks must be mounted on the platform and must provide continuous contact with the building face.

(vi) The load carrying components of the button guide stabilization system which transmit the load into the platform must be capable of supporting the weight of the platform, or provision must be made in the guide track connectors or platform attachments to prevent the weight of the platform from being transmitted to the platform attachments.

Note: See Figure 3 in Appendix B of this section for a description of a typical button guide stabilization system.

(6) Supported equipment.

(a) Supported equipment must maintain a vertical position in respect to the face of the building by means other than friction.

(b) Cog wheels or equivalent means must be incorporated to provide climbing traction between the supported equipment and the building guides. Additional guide wheels or shoes must be incorporated as may be necessary to ensure that the drive wheels are continuously held in positive engagement with the building guides.

(c) Launch guide mullions indexed to the building guides and retained in alignment with the building guides must be used to align drive wheels entering the building guides.

(d) Manned platforms used on supported equipment must comply with the requirements of (b)(i), (ii), and (iv) through (xi) of this subsection, covering suspended equipment.

(7) Suspension wire ropes and rope connections.

(a) Each specific installation must use suspension wire ropes or combination cable and connections meeting the specification recommended by the manufacturer of the hoisting machine used. Connections must be capable of developing at least 80 percent of the rated breaking strength of the wire rope.

WAC 296-24-88020 (Cont.)

(b) Each suspension rope must have a “Design Factor” of at least 10. The “Design Factor” is the ratio of the rated strength of the suspension wire rope to the rated working load, and must be calculated using the following formula:

F.= SxN/W
Where
F. = Design factor
S.= Manufacturer's rated strength of one suspension rope.
N.= Number of suspension ropes under load.
W.= Rated working load on all ropes at any point of travel.

(c) Suspension wire rope grade must be at least improved plow steel or equivalent.

(d) Suspension wire ropes must be sized to conform with the required design factor, but must not be less than 5/16 inch (7.94 mm) in diameter.

(e) No more than one reverse bend in 6 wire rope lays must be permitted.

(f) A corrosion-resistant tag must be securely attached to one of the wire rope fastenings when a suspension wire rope is to be used at a specific location and will remain in that location. This tag must bear the following wire rope data:

(i) The diameter (inches and/or mm);

(ii) Construction classification;

(iii) Whether nonpreformed or preformed;

(iv) The grade of material;

(v) The manufacturer's rated strength;

(vi) The manufacturer's name;

(vii) The month and year the ropes were installed; and

(viii) The name of the person or company which installed the ropes.

(g) A new tag must be installed at each rope renewal.

(h) The original tag must be stamped with the date of the resocketing, or the original tag must be retained and a supplemental tag must be provided when ropes are resocketed. The supplemental tag must show the date of resocketing and the name of the person or company that resocketed the rope.

WAC 296-24-88020 (Cont.)

(i) Winding drum type hoists must contain at least 3 wraps of the suspension wire rope on the drum when the suspended unit has reached the lowest possible point of its vertical travel.

(j) Traction drum and sheave type hoists must be provided with a wire rope of sufficient length to reach the lowest possible point of vertical travel of the suspended unit, and an additional length of the wire rope of at least 4 feet (1.2 m).

(k) The lengthening or repairing of suspension wire ropes is prohibited.

(l) Babbitted fastenings for suspension wire rope are prohibited.

(8) Control circuits, power circuits and their components.

(a) Electrical wiring and equipment must comply with Part L of chapter 296-24 WAC, except as otherwise required by this section.

(b) Electrical runway conductor systems must be of a type designed for use in exterior locations, and must be located so that they do not come into contact with accumulated snow or water.

(c) Cables must be protected against damage resulting from overtensioning or from other causes.

(d) Devices must be included in the control system for the equipment which will provide protection against electrical overloads, three phase reversal and phase failure. The control system must have a separate method, independent of the direction control circuit, for breaking the power circuit in case of an emergency or malfunction.

(e) Suspended or supported equipment must have a control system which will require the operator of the equipment to follow predetermined procedures.

(f) The following requirements must apply to electrical protection devices:

(i) On installations where the carriage does not have a stability factor of at least 4 against overturning, electrical contract(s) must be provided and so connected that the operating devices for the suspended or supported equipment must be operative only when the carriage is located and mechanically retained at an established operating point.

(ii) Overload protection must be provided in the hoisting or suspension system to protect against the equipment operating in the “up” direction with a load in excess of 125 percent of the rated load of the platform; and

(iii) An automatic detector must be provided for each suspension point that will interrupt power to all hoisting motors for travel in the “down” direction, and apply the primary brakes if any suspension wire rope becomes slack. A continuous-pressure rigging-bypass switch designed for use during rigging is permitted. This switch must only be used during rigging.

(g) Upper and lower directional switches designed to prevent the travel of suspended units beyond safe upward and downward levels must be provided.

(h) Emergency stop switches must be provided on remote controlled, roof-powered manned platforms adjacent to each control station on the platform.

WAC 296-24-88020 (Cont.)

(i) Cables which are in constant tension must have overload devices which will prevent the tension in the cable from interfering with the load limiting device required in (f)(ii) of this subsection, or with the platform roll limiting device required in subsection (5)(b)(iii) of this section. The setting of these devices must be coordinated with other overload settings at the time of design of the system, and must be clearly indicated on or near the device. The device must interrupt the equipment travel in the "down" direction.

[Statutory Authority: RCW 49.17.010, .040, .050, and .060. 04-14-028 (Order 01-12), § 296-24-88020, filed 06/29/04, effective 01/01/2005 Statutory Authority: RCW 49.17.010, .040, .050. 00-08-078 (Order 99-15), § 296-24-88020, filed 04/04/00, effective 07/01/00.]

WAC 296-24-88025 Maintenance.

(1) General maintenance. All parts of the equipment affecting safe operation must be maintained in proper working order so that they may perform the functions for which they were intended. The equipment must be taken out of service when it is not in proper working order.

(2) Cleaning.

(a) Control or power contactors and relays must be kept clean.

(b) All other parts must be kept clean if their proper functioning would be affected by the presence of dirt or other contaminants.

(3) Periodic resocketing of wire rope fastenings.

(a) Hoisting ropes utilizing poured socket fastenings must be resocketed at the nondrum ends at intervals not exceeding 24 months. In resocketing the ropes, a sufficient length must be cut from the end of the rope to remove damaged or fatigued portions.

(b) Resocketed ropes must conform to the requirements of WAC 296-24-88020(7).

(c) Limit switches affected by the resocketed ropes must be reset, if necessary.

(4) Periodic reshackling of suspension wire ropes. The hoisting ropes must be reshackled at the nondrum ends at intervals not exceeding 24 months. When reshackling the ropes, a sufficient length must be cut from the end of the rope to remove damaged or fatigued portions.

(5) Roof systems. Roof track systems, tie-downs, or similar equipment must be maintained in proper working order so that they perform the function for which they were intended.

(6) Building face guiding members. T-rails, indented mullions, or equivalent guides located in the face of a building must be maintained in proper working order so that they perform the functions for which they were intended. Brackets for cable stabilizers must similarly be maintained in proper working order.

(7) Inoperative safety devices. No person must render a required safety device or electrical protective device inoperative, except as necessary for tests, inspections, and maintenance. Immediately upon completion of such tests, inspections, and maintenance, the device must be restored to its normal operating condition.

[Statutory Authority: RCW 49.17.010, .040, .050. 00-08-078 (Order 99-15), § 296-24-88025, filed 04/04/00, effective 07/01/00.]

WAC 296-24-88030 Operations.

(1) Training.

(a) Working platforms must be operated only by persons who are proficient in the operation, safe use and inspection of the particular working platform to be operated.

(b) All employees who operate working platforms must be trained in the following:

(i) Recognition of, and preventive measures for, the safety hazards associated with their individual work tasks.

(ii) General recognition and prevention of safety hazards associated with the use of working platforms, including the provisions in the section relating to the particular working platform to be operated.

(iii) Emergency action plan procedures required in WAC 296-24-88015(9).

(iv) Work procedures required in (d) of this subsection.

(v) Personal fall arrest system inspection, care, use and system performance.

(c) Training of employees in the operation and inspection of working platforms must be done by a competent person.

(d) Written work procedures for the operation, safe use and inspection of working platforms must be provided for employee training. Pictorial methods of instruction, may be used, in lieu of written work procedures, if employee communication is improved using this method. The operating manuals supplied by manufacturers for platform system components can serve as the basis for these procedures.

(e) The employer must certify that employees have been trained in operating and inspecting a working platform by preparing a certification record which includes the identity of the person trained, the signature of the employer or the person who conducted the training and the date that training was completed. The certification record must be prepared at the completion of the training required in (b) of this subsection, and must be maintained in a file for the duration of the employee's employment. The certification record must be kept readily available for review by the director or an authorized representative.

(2) Use.

(a) Working platforms must not be loaded in excess of the rated load, as stated on the platform load rating plate.

(b) Employees must be prohibited from working on snow, ice, or other slippery material covering platforms, except for the removal of such materials.

(c) Adequate precautions must be taken to protect the platform, wire ropes and life lines from damage due to acids or other corrosive substances, in accordance with the recommendations of the corrosive substance producer, supplier, platform manufacturer or other equivalent information sources. Platform members which have been exposed to acids or other corrosive substances must be washed down with a neutralizing solution, at a frequency recommended by the corrosive substance producer or supplier.

WAC 296-24-88030 (Cont.)

(d) Platform members, wire ropes and life lines must be protected when using a heat producing process. Wire ropes and life lines which have been contacted by the heat producing process must be considered to be permanently damaged and must not be used.

(e) The platform must not be operated in winds in excess of 25 miles per hour (40.2 km/hr) except to move it from an operating to a storage position. Wind speed must be determined based on the best available information, which includes on-site anemometer readings and local weather forecasts which predict wind velocities for the area.

(f) On exterior installations, an anemometer must be mounted on the platform to provide information of on-site wind velocities prior to and during the use of the platform. The anemometer may be a portable (hand held) unit which is temporarily mounted during platform use.

(g) Tools, materials and debris not related to the work in progress must not be allowed to accumulate on platforms. Stabilizer ties must be located so as to allow unencumbered passage along the full length of the platform and must be of such length so as not to become entangled in rollers, hoists or other machinery.

[Statutory Authority: RCW 49.17.010, .040, .050. 00-08-078 (Order 99-15), § 296-24-88030, filed 04/04/00, effective 07/01/00.]

WAC 296-24-88035 Personal fall protection. Employees on working platforms must be protected by a personal fall arrest system meeting the requirements of Appendix C, Part I, WAC 296-24-88050 of this standard, and as otherwise provided by this standard.

[Statutory Authority: RCW 49.17.010, .040, .050. 00-08-078 (Order 99-15), § 296-24-88035, filed 04/04/00, effective 07/01/00.]

WAC 296-24-88040 Appendix A-Guidelines (advisory).

(1) Use of the Appendix. Appendix A provides examples of equipment and methods to assist the employer in meeting the requirements of the indicated provision of the standard. Employers may use other equipment or procedures which conform to the requirements of the standard. This Appendix neither adds to nor detracts from the mandatory requirements set forth in WAC 296-24-880 through 296-24-88055.

(2) Assurance. WAC 296-24-880(3) requires the building owner to inform the employer in writing that the powered platform installation complies with certain requirements of the standard, since the employer may not have the necessary information to make these determinations. The employer, however, remains responsible for meeting these requirements which have not been set off in WAC 296-24-880 (3)(a).

(3) Design requirements. The design requirements for each installation should be based on the limitations (stresses, deflections, etc.), established by nationally recognized standards as promulgated by the following organizations, or to equivalent standards:

WAC 296-24-88040 (Cont.)

AA-The Aluminum Association, 900 19th Street Northwest, Suite 300, Washington, D.C. 20006
Aluminum Construction Manual
Specifications for Aluminum Structures
Aluminum Standards and Data
AGMA-American Gear Manufacturers Association, 1500 King Street, Suite 201, Alexandria, VA 22314
AISC-American Institute of Steel Construction, 1 East Wacker Drive, Suite 3100, Chicago, IL 60601-2001
ANSI-American National Standards Institute, Inc., 11 West 42nd Street, New York, NY 10036
ASCE-American Society of Civil Engineers, 345 East 47th Street, New York, NY 10017
ASME-American Society of Mechanical Engineers, 345 East 47th Street, New York, NY 10017
ASTM-American Society for Testing and Materials, 1916 Race Street, Philadelphia, PA 19103-1187
AWS-American Welding Society, Inc., Box 351040, 550 N.W. LeJeunne Road, Miami, FL 33126
NEMA-National Electric Manufacturers Association, 2101 L Street N.W., Washington, D.C. 20037

(4) Tie-in guides. Indented mullions, T-rails or other equivalent guides are acceptable as tie-in guides in a building face for a continuous stabilization system. Internal guides are embedded in other building members with only the opening exposed (see Figure 1 of Appendix B). External guides, however, are installed external to the other building members and so are fully exposed. The minimum opening for tie-in guides is three-quarters of an inch (19 mm), and the minimum inside dimensions are one-inch (25 mm) deep and two inches (50 mm) wide.

Employers should be aware of the hazards associated with tie-in guides in a continuous stabilization system which was not designed properly. For example, joints in these track systems may become extended or discontinuous due to installation or building settlement. If this alignment problem is not corrected, the system could jam when a guide roller or guide shoe strikes a joint and this would cause a hazardous situation for employees. In another instance, faulty design will result in guide rollers being mounted in a line so they will jam in the track at the slightest misalignment.

(5) Building anchors (intermittent stabilization system). In the selection of the vertical distance between building anchors, certain factors should be given consideration. These factors include building height and architectural design, platform length and weight, wire rope angulation, and the wind velocities in the building area. Another factor to consider is the material of the building face, since this material may be adversely affected by the building rollers.

External or indented type building anchors are acceptable. Receptacles in the building facade used for the indented type should be kept clear of extraneous materials which will hinder their use. During the inspection of the platform installation, evidence of a failure or abuse of the anchors should be brought to the attention of the employer.

(6) Stabilizer tie length. A stabilizer tie should be long enough to provide for the planned angulation of the suspension cables. However, the length of the tie should not be excessive and become a problem by possibly becoming entangled in the building face rollers or parts of the platform machinery.

WAC 296-24-88040 (Cont.)

The attachment length may vary due to material elongation and this should be considered when selecting the material to be used. Consideration should also be given to the use of ties which are easily installed by employees, since this will encourage their use.

(7) Intermittent stabilization system. Intermittent stabilization systems may use different equipment, tie-in devices and methods to restrict the horizontal movement of a powered platform with respect to the face of the building. One acceptable method employs corrosion-resistant building anchors secured in the face of the building in vertical rows every third floor or 50 feet (15.3 m), whichever is less. The anchors are spaced horizontally to allow a stabilization attachment (stabilizer tie) for each of the two platform suspension wire ropes. The stabilizer tie consists of two parts. One part is a quick connect-quick disconnect device which utilizes a corrosion-resistant yoke and retainer spring that is designed to fit over the building anchors. The second part of the stabilizer tie is a lanyard which is used to maintain a fixed distance between the suspension wire rope and the face of the building.

In this method, as the suspended powered platform descends past the elevation of each anchor, the descent is halted and each of the platform occupants secures a stabilizer tie between a suspension wire rope and a building anchor. The procedure is repeated as each elevation of a building anchor is reached during the descent of the powered platform.

As the platform ascends, the procedure is reversed; that is, the stabilizer ties are removed as each elevation of a building anchor is reached. The removal of each stabilizer tie is assured since the platform is provided with stopping devices which will interrupt power to its hoist(s) in the event either stopping device contacts a stabilizer during the ascent of the platform.

Figure 2 of Appendix B illustrates another type of acceptable intermittent stabilization system which utilizes retaining pins as the quick connect-quick disconnect device in the stabilizer tie.

(8) Wire rope inspection. The inspection of the suspension wire rope is important since the rope gradually loses strength during its useful life. The purpose of the inspection is to determine whether the wire rope has sufficient integrity to support a platform with the required design factor.

If there is any doubt concerning the condition of a wire rope or its ability to perform the required work, the rope should be replaced. The cost of wire rope replacement is quite small if compared to the cost in terms of human injuries, equipment down time and replacement.

No listing of critical inspection factors, which serve as a basis for wire rope replacement in the standard, can be a substitute for an experienced inspector of wire rope. The listing serves as a user's guide to the accepted standards by which ropes must be judged.

Rope life can be prolonged if preventive maintenance is performed regularly. Cutting off an appropriate length of rope at the end termination before the core degrades and valley brakes appear minimizes degradation at these sections.

(9) General maintenance. In meeting the general maintenance requirement in WAC 296-24-88025(1), the employer should undertake the prompt replacement of broken, worn and damaged parts, switch contacts, brushes, and short flexible conductors of electrical devices. The components of the electrical service system and traveling cables should be replaced when damaged or significantly abraded. In addition, gears, shafts, bearings, brakes and hoisting drums should be kept in proper alignment.

WAC 296-24-88040 (Cont.)

(10) Training. In meeting the training requirement of WAC 296-24-88030(1), employers should use both on the job training and formal classroom training. The written work procedures used for this training should be obtained from the manufacturer, if possible, or prepared as necessary for the employee's information and use.

Employees who will operate powered platforms with intermittent stabilization systems should receive instruction in the specific ascent and descent procedures involving the assembly and disassembly of the stabilizer ties.

An acceptable training program should also include employee instruction in basic inspection procedures for the purpose of determining the need for repair and replacement of platform equipment. In addition, the program should cover the inspection, care and use of the personal fall protection equipment required in Appendix C, Part I, subsections (5) and (6).

In addition, the training program should also include emergency action plan elements. OSHA brochure #3088 (Rev.) 1985, "How to Prepare for Workplace Emergencies," details the basic steps needed to prepare to handle emergencies in the workplace.

Following the completion of a training program, the employee should be required to demonstrate competency in operating the equipment safely. Supplemental training of the employee should be provided by the employer, as necessary, if the equipment used or other working conditions should change.

An employee who is required to work with chemical products on a platform should receive training in proper cleaning procedures, and in the hazards, care and handling of these products. In addition, the employee should be supplied with the appropriate personal protective equipment, such as gloves and eye and face protection.

(11) Suspension and securing of powered platforms (equivalency). One acceptable method of demonstrating the equivalency of a method of suspending or securing a powered platform, as required in WAC 296-24-88015 (2)(c), 296-24-88020 (3) and (5)(a)(vi), is to provide an engineering analysis by a registered professional engineer. The analysis should demonstrate that the proposed method will provide an equal or greater degree of safety for employees than any one of the methods specified in the standard.

[Statutory Authority: RCW 49.17.010, .040, .050. 00-08-078 (Order 99-15), § 296-24-88040, filed 04/04/00, effective 07/01/00.]

WAC 296-24-88045 Appendix B-Exhibits (advisory).

The three drawings in Appendix B illustrate typical platform stabilization systems which are addressed in the standard. The drawings are to be used for reference purposes only, and do not illustrate all the mandatory requirements for each system.

[Statutory Authority: RCW 49.17.010, .040, .050. 00-08-078 (Order 99-15), § 296-24-88045, filed 04/04/00, effective 07/01/00.]

WAC 296-24-88045 (Cont.)

FIGURE 1

**Typical Self-Powered Platform –
Continuous External or Indented Mullion Guide System**

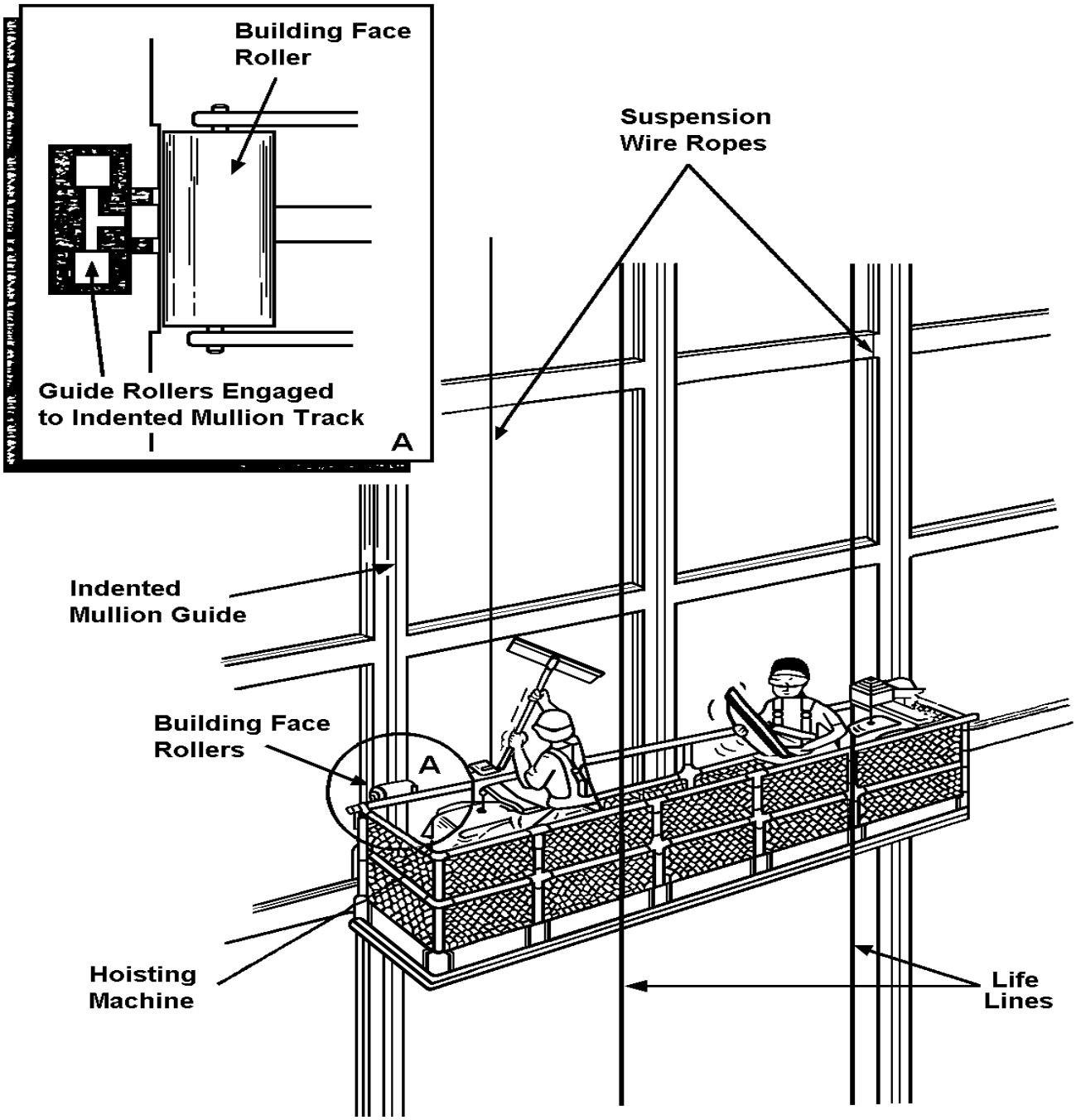

WAC 296-24-88045 (Cont.)

Figure 2. Typical Self-Powered Platform--

Intermittent Tie-in System

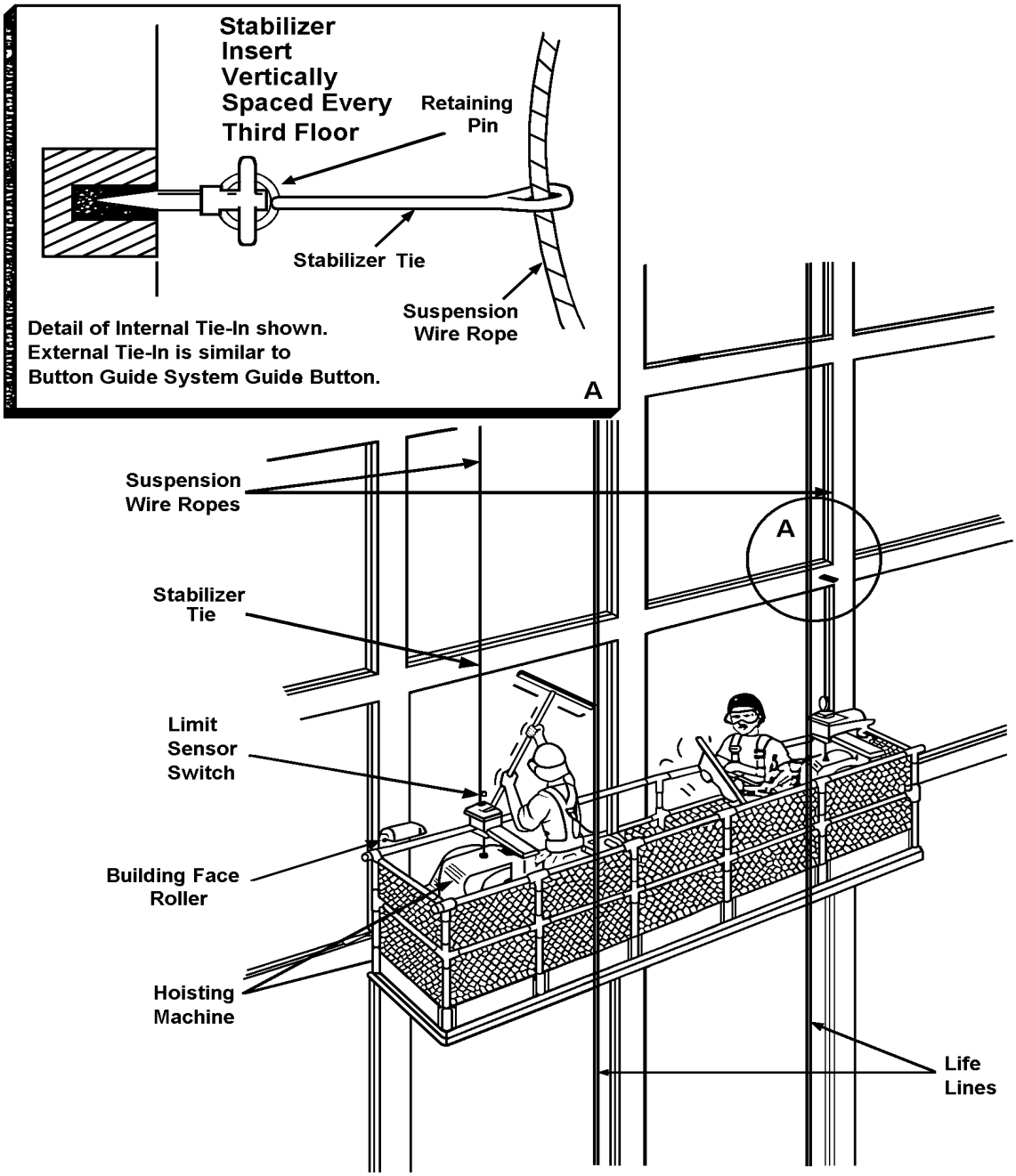

WAC 296-24-88045 (Cont.)

FIGURE 3
Typical Self-Powered Platform--
Button Guide System

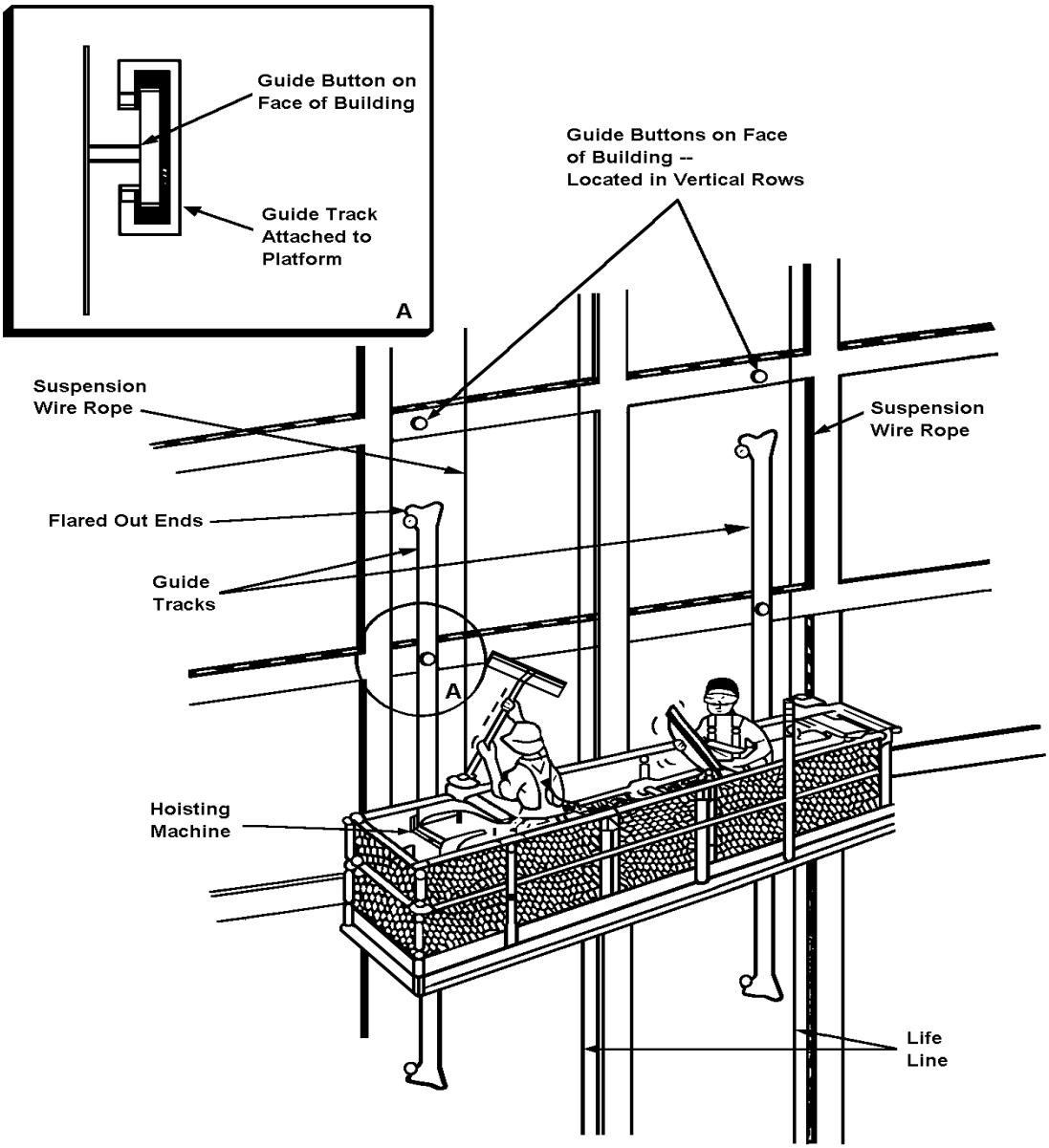

WAC 296-24-88050 Appendix C-Personal fall arrest system (Part I-Mandatory; Parts II and III-Nonmandatory).

(1) Use of the Appendix.

Part I of Appendix C sets out the mandatory criteria for personal fall arrest systems used by all employees using powered platforms. Part II sets out nonmandatory test procedures which may be used to determine compliance with applicable requirements contained in Part I of this Appendix. Part III provides nonmandatory guidelines which are intended to assist employers in complying with these provisions.

PART I
Personal fall arrest systems (mandatory).

(1) Scope and application. This section establishes the application of and performance criteria for personal fall arrest systems which are required for use by all employees using powered platforms under WAC 296-24-88035.

(2) Definitions.

Anchorage means a secure point of attachment for lifelines, lanyards, or deceleration devices which is capable of withstanding the forces specified in the applicable sections of chapter 296-24 WAC, and independent of the means of supporting or suspending the employee.

Buckle means any device for holding the body harness closed around the employee's body.

Competent person means an individual knowledgeable of fall protection equipment, including the manufacturers recommendations and instructions for the proper use, inspection, and maintenance; and who is capable of identifying existing and potential fall hazards; and who has the authority to take prompt corrective action to eliminate those hazards; and who is knowledgeable of the rules contained in this section regarding the erection, use, inspection, and maintenance of fall protection equipment and systems.

Connector means a device which is used to couple (connect) parts of the personal fall arrest system and positioning device systems together. It may be an independent component of the system, such as a carabiner, or it may be an integral component of part of the system (such as a buckle or dee-ring sewn into a body belt or body harness, or a snap-hook spliced or sewn to a lanyard or self-retracting lanyard).

Deceleration device means any mechanism, such as a rope grab, ripstitch lanyard, specially woven lanyard, tearing or deforming lanyards, automatic self retracting-lifeline/lanyard, etc., which serves to dissipate a substantial amount of energy during a fall arrest, or otherwise limit the energy imposed on an employee during fall arrest.

Deceleration distance means the additional vertical distance a falling employee travels, excluding lifeline elongation and free fall distance, before stopping, from the point at which the deceleration device begins to operate. It is measured as the distance between the location of an employee's full body harness attachment point at the moment of activation (at the onset of fall arrest forces) of the deceleration device during a fall, and the location of that attachment point after the employee comes to a full stop.

Equivalent means alternative designs, materials or methods to protect against a hazard which the employer can demonstrate will provide an equal or greater degree of safety for employees than the methods, materials or designs specified in the standard.

WAC 296-24-88050 (Cont.)

Free fall means the act of falling before a personal fall arrest system begins to apply force to arrest the fall.

Free fall distance means the vertical displacement of the fall arrest attachment point on the employee's body harness between onset of the fall and just before the system begins to apply force to arrest the fall. This distance excludes deceleration distance, and lifeline lanyard elongation, but includes any deceleration device slide distance or self-retracting lifeline/lanyard extension before they operate and fall arrest forces occur.

Full body harness means a configuration of connected straps to distribute a fall arresting force over at least the thighs, shoulders and pelvis, with provisions for attaching a lanyard, lifeline, or deceleration device.

Lanyard means a flexible line of webbing, rope, or cable used to secure a body belt or harness to a lifeline or an anchorage point usually 2, 4, or 6 feet long.

Lifeline means a vertical line from a fixed anchorage or between two horizontal anchorages, independent of walking or working surfaces, to which a lanyard or device is secured. Lifeline as referred to in this text is one which is part of a fall protection system used as back-up safety for an elevated worker.

Personal fall arrest system means a system used to arrest an employee in a fall from a working level. It consists of an anchorage, connectors, body harness and may include a lanyard, deceleration device, lifeline, or suitable combinations of these.

Qualified means one who, by possession of a recognized degree, certificate, or professional standing, or who by extensive knowledge, training, and experience, has successfully demonstrated his/her ability to solve or resolve problems related to the subject matter, the work, or the project.

Rope grab means a fall arrester that is designed to move up or down a lifeline suspended from a fixed overhead or horizontal anchorage point, or lifeline, to which the belt or harness is attached. In the event of a fall, the rope grab locks onto the lifeline rope through compression to arrest the fall. The use of a rope grab device is restricted for all restraint applications.

Self-retracting lifeline/lanyard means a deceleration device which contains a drum-wound line which may be slowly extracted from, or retracted onto, the drum under slight tension during normal employee movement, and which after onset of a fall, automatically locks the drum and arrests the fall.

Snap-hook means a self-closing connecting device with a gatekeeper latch or similar arrangement that will remain closed until manually opened. This includes single action snap hooks that open when the gatekeeper is depressed and double action snap hooks that require a second action on a gatekeeper before the gate can be opened.

Tie-off means the act of an employee, wearing personal fall protection equipment, connecting directly or indirectly to an anchorage. It also means the condition of an employee being connected to an anchorage.

(3) Design for system components.

(a) Connectors must be drop forged, pressed or formed steel, or made of equivalent materials.

(b) Connectors must have a corrosion-resistant finish, and all surfaces and edges must be smooth to prevent damage to interfacing parts of the system.

(c) Lanyards and vertical lifelines which tie-off one employee must have a minimum breaking strength of 5,000 pounds (22.2 kN).

WAC 296-24-88050 (Cont.)

(d) Self-retracting lifelines and lanyards which automatically limit free fall distance to 2 feet (0.61 m) or less must have components capable of sustaining a minimum static tensile load of 3,000 pounds (13.3 kN) applied to the device with the lifeline or lanyard in the fully extended position.

(e) Self-retracting lifelines and lanyards which do not limit free fall distance to 2 feet (0.61 m) or less, ripstitch lanyards, and tearing and deforming lanyards must be capable of sustaining a minimum tensile load of 5,400 pounds (23.9 kN) applied to the device with the lifeline or lanyard in the fully extended position.

(f) Dee-rings and snap-hooks must be capable of sustaining a minimum tensile load of 5000 pounds (22.2 N).

(g) Dee-rings and snap-hooks must be 100 percent proof-tested to a minimum tensile load of 3600 pounds (16 kN) without cracking, breaking, or taking permanent deformation.

(h) Snap-hooks must be sized to be compatible with the member to which they are connected so as to prevent unintentional disengagement of the snap-hook by depression of the snap-hook keeper by the connected member, or must be a locking type snap-hook designed and used to prevent disengagement of the snap-hook by the contact of the snap-hook keeper by the connected member.

(i) Horizontal lifelines, where used, must be designed, and installed as part of a complete personal fall arrest system, which maintains a safety factor of at least 2, under the supervision of a qualified person.

(j) Anchorages to which personal fall arrest equipment is attached must be capable of supporting at least 5,000 pounds (22.2 kN) per employee attached, or must be designed, installed, and used as part of a complete personal fall arrest system which maintains a safety factor of at least two, under the supervision of a qualified person.

(k) Ropes and straps (webbing) used in lanyards, lifelines, and strength components of body harnesses, must be made from synthetic fibers or wire rope.

(4) System performance criteria.

(a) Personal fall arrest systems must, when stopping a fall:

(i) Limit maximum arresting force on an employee to 1,800 pounds (8 kN) when used with a body harness;

(ii) Bring an employee to a complete stop and limit maximum deceleration distance an employee travels to 3.5 feet (1.07 m); and

(iii) Must have sufficient strength to withstand twice the potential impact energy of an employee free falling a distance of 6 feet (1.8 m), or the free fall distance permitted by the system, whichever is less.

(b)(i) When used by employees having a combined person and tool weight of less than 310 pounds (140 kg), personal fall arrest systems which meet the criteria and protocols contained in subsections (2), (3), and (4) in Part II of this Appendix must be considered as complying with the provisions of (a) of this subsection.

WAC 296-24-88050 (Cont.)

(ii) When used by employees having a combined tool and body weight of 310 pounds (140 kg) or more, personal fall arrest systems which meet the criteria and protocols contained in subsections (2), (3), and (4) of Part II may be considered as complying with the provisions of (a) of this subsection provided that the criteria and protocols are modified appropriately to provide proper protection for such heavier weights.

(5) Care and use.

(a) Snap-hooks, unless of a locking type designed and used to prevent disengagement from the following connections, must not be engaged:

(i) Directly to webbing, rope or wire rope;

(ii) To each other;

(iii) To a dee-ring to which another snap-hook or other connector is attached;

(iv) To a horizontal lifeline; or

(v) To any object which is incompatibly shaped or dimensioned in relation to the snap-hook such that the connected object could depress the snap-hook keeper a sufficient amount to release itself.

(b) Devices used to connect to a horizontal lifeline which may become a vertical lifeline must be capable of locking in either direction on the lifeline.

(c) Personal fall arrest systems must be rigged such that an employee can neither free fall more than 6 feet (1.8 m), nor contact any lower level.

(d) The attachment point of the body harness must be located in the center of the wearer's back near shoulder level, or above the wearer's head.

(e) When vertical lifelines are used, each employee must be provided with a separate lifeline.

(f) Personal fall arrest systems or components must be used only for employee fall protection.

(g) Personal fall arrest systems or components subjected to impact loading must be immediately removed from service and must not be used again for employee protection unless inspected and determined by a competent person to be undamaged and suitable for reuse.

(h) The employer must provide for prompt rescue of employees in the event of a fall or must assure the self-rescue capability of employees.

(i) Before using a personal fall arrest system, and after any component or system is changed, employees must be trained in accordance with the requirements of WAC 296-24-88030(1), in the safe use of the system.

(6) Inspections. Personal fall arrest systems must be inspected prior to each use for mildew, wear, damage and other deterioration, and defective components must be removed from service if their strength or function may be adversely affected.

WAC 296-24-88050 (Cont.)

PART II
Test methods for personal fall arrest systems (nonmandatory)

(1) General. Subsections (2), (3), (4) and (5) of this Part II set forth test procedures which may be used to determine compliance with the requirements in subsection (4) of Part I of this Appendix.

(2) General conditions for all tests in Part II.

(a) Lifelines, lanyards and deceleration devices should be attached to an anchorage and connected to the body harness in the same manner as they would be when used to protect employees.

(b) The anchorage should be rigid, and should not have a deflection greater than .04 inches (1 mm) when a force of 2,250 pounds (10 kN) is applied.

(c) The frequency response of the load measuring instrumentation should be 120 Hz.

(d) The test weight used in the strength and force tests should be a rigid, metal, cylindrical or torso-shaped object with a girth of 38 inches plus or minus 4 inches (96 cm plus or minus 10 cm).

(e) The lanyard or lifeline used to create the free fall distance should be supplied with the system, or in its absence, the least elastic lanyard or lifeline available to be used with the system.

(f) The test weight for each test should be hoisted to the required level and should be quickly released without having any appreciable motion imparted to it.

(g) The system's performance should be evaluated taking into account the range of environmental conditions for which it is designed to be used.

(h) Following the test, the system need not be capable of further operation.

(3) Strength test.

(a) During the testing of all systems, a test weight of 300 pounds plus or minus 5 pounds (135 kg plus or minus 2.5 kg) should be used. (See subsection (2)(d) of this part.)

(b) The test consists of dropping the test weight once. A new unused system should be used for each test.

(c) For lanyard systems, the lanyard length should be 6 feet plus or minus 2 inches (1.83 m plus or minus 5 cm) as measured from the fixed anchorage to the attachment on the body belt or body harness.

(d) For rope-grab-type deceleration systems, the length of the lifeline above the centerline of the grabbing mechanism to the lifeline's anchorage point should not exceed 2 feet (0.61 m).

(e) For lanyard systems, for systems with deceleration devices which do not automatically limit free fall distance to 2 feet (0.61 m) or less, and for systems with deceleration devices which have a connection distance in excess of one foot (0.3 m) (measured between the centerline of the lifeline and the attachment point to the body harness), the test weight should be rigged to free fall a distance of 7.5 feet (2.3 m) from a point that is 1.5 feet (46 cm) above the anchorage point, to its

WAC 296-24-88050 (Cont.)

hanging location (6 feet below the anchorage). The test weight should fall without interference, obstruction, or hitting the floor or ground during the test. In some cases a nonelastic wire lanyard of sufficient length may need to be added to the system (for test purposes) to create the necessary free fall distance.

(f) For deceleration device systems with integral lifelines or lanyards which automatically limit free fall distance to 2 feet (0.61 m) or less, the test weight should be rigged to free fall a distance of 4 feet (1.22 m).

(g) Any weight which detaches from the harness should constitute failure for the strength test.

(4) Force test.

(a) General. The test consists of dropping the respective test weight specified in (b)(i) or (c)(i) of this subsection once. A new, unused system should be used for each test.

(b) For lanyard systems.

(i) A test weight of 220 pounds plus or minus three pounds (100 kg plus or minus 1.6 kg) should be used. (See subsection (2)(d) above.)

(ii) Lanyard length should be 6 feet plus or minus 2 inches (1.83 m plus or minus 5 cm) as measured from the fixed anchorage to the attachment on the body harness.

(iii) The test weight should fall free from the anchorage level to its hanging location (a total of 6 feet (1.83 m) free fall distance) without interference, obstruction, or hitting the floor or ground during the test.

(c) For all other systems.

(i) A test weight of 220 pounds plus or minus 3 pounds (100 kg plus or minus 1.6 kg) should be used. (See subsection (2)(d) above.)

(ii) The free fall distance to be used in the test should be the maximum fall distance physically permitted by the system during normal use conditions, up to a maximum free fall distance for the test weight of 6 feet (1.83 m), except as follows:

(A) For deceleration systems which have a connection link or lanyard, the test weight should free fall a distance equal to the connection distance (measured between the centerline of the lifeline and the attachment point to the body harness).

(B) For deceleration device systems with integral lifelines or lanyards which automatically limit free fall distance to 2 feet (0.61 m) or less, the test weight should free fall a distance equal to that permitted by the system in normal use. (For example, to test a system with a self-retracting lifeline or lanyard, the test weight should be supported and the system allowed to retract the lifeline or lanyard as it would in normal use. The test weight would then be released and the force and deceleration distance measured).

(d) A system fails the force test if the recorded maximum arresting force exceeds 2,520 pounds (11.2 kN) when using a body harness.

WAC 296-24-88050 (Cont.)

(e) The maximum elongation and deceleration distance should be recorded during the force test.

(5) Deceleration device tests.

(a) General. The device should be evaluated or tested under the environmental conditions, (such as rain, ice, grease, dirt, type of lifeline, etc.), for which the device is designed.

(b) Rope-grab-type deceleration devices.

(i) Devices should be moved on a lifeline 1,000 times over the same length of line a distance of not less than one foot (30.5 cm), and the mechanism should lock each time.

(ii) Unless the device is permanently marked to indicate the type(s) of lifeline which must be used, several types (different diameters and different materials), of lifelines should be used to test the device.

(c) Other self-activating-type deceleration devices. The locking mechanisms of other self-activating-type deceleration devices designed for more than one arrest should lock each of 1,000 times as they would in normal service.

PART III

Additional nonmandatory guidelines for personal fall arrest systems. The following information constitutes additional guidelines for use in complying with requirements for a personal fall arrest system.

(1) Selection and use considerations. The kind of personal fall arrest system selected should match the particular work situation, and any possible free fall distance should be kept to a minimum. Consideration should be given to the particular work environment. For example, the presence of acids, dirt, moisture, oil, grease, etc., and their effect on the system, should be evaluated. Hot or cold environments may also have an adverse affect on the system. Wire rope should not be used where an electrical hazard is anticipated. As required by the standard, the employer must plan to have means available to promptly rescue an employee should a fall occur, since the suspended employee may not be able to reach a work level independently.

Where lanyards, connectors, and lifelines are subject to damage by work operations such as welding, chemical cleaning, and sandblasting, the component should be protected, or other securing systems should be used. The employer should fully evaluate the work conditions and environment (including seasonal weather changes) before selecting the appropriate personal fall protection system. Once in use, the system's effectiveness should be monitored. In some cases, a program for cleaning and maintenance of the system may be necessary.

(2) Testing considerations. Before purchasing or putting into use a personal fall arrest system, an employer should obtain from the supplier information about the system based on its performance during testing so that the employer can know if the system meets this standard. Testing should be done using recognized test methods. Part II of this Appendix C contains test methods recognized for evaluating the performance of fall arrest systems. Not all systems may need to be individually tested; the performance of some systems may be based on data and calculations derived from testing of similar systems, provided that enough information is available to demonstrate similarity of function and design.

WAC 296-24-88050 (Cont.)

(3) Component compatibility considerations. Ideally, a personal fall arrest system is designed, tested, and supplied as a complete system. However, it is common practice for lanyards, connectors, lifelines, deceleration devices, and body harnesses to be interchanged since some components wear out before others. The employer and employee should realize that not all components are interchangeable. For instance, a lanyard should not be connected between a body harness and a deceleration device of the self-retracting type since this can result in additional free fall for which the system was not designed. Any substitution or change to a personal fall arrest system should be fully evaluated or tested by a competent person to determine that it meets the standard, before the modified system is put in use.

(4) Employee training considerations. Thorough employee training in the selection and use of personal fall arrest systems is imperative. As stated in the standard, before the equipment is used, employees must be trained in the safe use of the system. This should include the following: Application limits; proper anchoring and tie-off techniques; estimation of free fall distance, including determination of deceleration distance, and total fall distance to prevent striking a lower level; methods of use; and inspection and storage of the system. Careless or improper use of the equipment can result in serious injury or death. Employers and employees should become familiar with the material in this Appendix, as well as manufacturer's recommendations, before a system is used. Of uppermost importance is the reduction in strength caused by certain tie-offs (such as using knots, tying around sharp edges, etc.) and maximum permitted free fall distance. Also, to be stressed are the importance of inspections prior to use, the limitations of the equipment, and unique conditions at the worksite which may be important in determining the type of system to use.

(5) Instruction considerations. Employers should obtain comprehensive instructions from the supplier as to the system's proper use and application, including, where applicable:

(a) The force measured during the sample force test;

(b) The maximum elongation measured for lanyards during the force test;

(c) The deceleration distance measured for deceleration devices during the force test;

(d) Caution statements on critical use limitations;

(e) Application limits;

(f) Proper hook-up, anchoring and tie-off techniques, including the proper dee-ring or other attachment point to use on the body harness for fall arrest;

(g) Proper climbing techniques;

(h) Methods of inspection, use, cleaning, and storage; and

(i) Specific lifelines which may be used. This information should be provided to employees during training.

(6) Inspection considerations. As stated in WAC 296-24-88050(6), personal fall arrest systems must be regularly inspected. Any component with any significant defect, such as cuts, tears, abrasions, mold, or undue stretching; alterations or additions which might affect its efficiency; damage due to deterioration; contact with fire, acids, or other corrosives; distorted hooks or faulty hook springs; tongues unfitted to the shoulder of buckles; loose or damaged mountings; nonfunctioning parts; or wearing or internal deterioration in the ropes must be withdrawn from service immediately, and should be tagged or marked as unusable, or destroyed.

WAC 296-24-88050 (Cont.)

(7) Rescue considerations. As required by WAC 296-24-88050 (5)(h) when personal fall arrest systems are used, the employer must assure that employees can be promptly rescued or can rescue themselves should a fall occur. The availability of rescue personnel, ladders or other rescue equipment should be evaluated. In some situations, equipment which allows employees to rescue themselves after the fall has been arrested may be desirable, such as devices which have descent capability.

(8) Tie-off considerations.

(a) One of the most important aspects of personal fall protection systems is fully planning the system before it is put into use. Probably the most overlooked component is planning for suitable anchorage points. Such planning should ideally be done before the structure or building is constructed so that anchorage points can be incorporated during construction for use later for window cleaning or other building maintenance. If properly planned, these anchorage points may be used during construction, as well as afterwards.

(b) Employers and employees should at all times be aware that the strength of a personal fall arrest system is based on its being attached to an anchoring system which does not significantly reduce the strength of the system (such as a properly dimensioned eye-bolt/snap-hook anchorage). Therefore, if a means of attachment is used that will reduce the strength of the system, that component should be replaced by a stronger one, but one that will also maintain the appropriate maximum arrest force characteristics.

(c) Tie-off using a knot in a rope lanyard or lifeline (at any location) can reduce the lifeline or lanyard strength by 50 percent or more. Therefore, a stronger lanyard or lifeline should be used to compensate for the weakening effect of the knot, or the lanyard length should be reduced (or the tie-off location raised) to minimize free fall distance, or the lanyard or lifeline should be replaced by one which has an appropriately incorporated connector to eliminate the need for a knot.

(d) Tie-off of a rope lanyard or lifeline around an “H” or “I” beam or similar support can reduce its strength as much as 70 percent due to the cutting action of the beam edges. Therefore, use should be made of a webbing lanyard or wire core lifeline around the beam; or the lanyard or lifeline should be protected from the edge; or free fall distance should be greatly minimized.

(e) Tie-off where the line passes over or around rough or sharp surfaces reduces strength drastically. Such a tie-off should be avoided or an alternative tie-off rigging should be used. Such alternatives may include use of a snap-hook/dee-ring connection, wire rope tie-off, an effective padding of the surfaces, or an abrasion-resistance strap around or over the problem surface.

(f) Horizontal lifelines may, depending on their geometry and angle of sag, be subjected to greater loads than the impact load imposed by an attached component. When the angle of horizontal lifeline sag is less than 30 degrees, the impact force imparted to the lifeline by an attached lanyard is greatly amplified. For example, with a sag angle of 15 degrees, the force amplification is about 2:1 and at 5 degrees sag, it is about 6:1. Depending on the angle of sag, and the line's elasticity, the strength of the horizontal lifeline and the anchorages to which it is attached should be increased a number of times over that of the lanyard. Extreme care should be taken in considering a horizontal lifeline for multiple tie-offs. The reason for this is that in multiple tie-offs to a horizontal lifeline, if one employee falls, the movement of the falling employee and the horizontal lifeline during arrest of the fall may cause other employees to also fall. Horizontal lifeline and anchorage strength should be increased for each additional employee to be tied-off. For these and other reasons, the design of systems using horizontal lifelines must only be done by qualified persons. Testing of installed lifelines and anchors prior to use is recommended.

WAC 296-24-88050 (Cont.)

(g) The strength of an eye-bolt is rated along the axis of the bolt and its strength is greatly reduced if the force is applied at an angle to this axis (in the direction of shear). Also, care should be exercised in selecting the proper diameter of the eye to avoid accidental disengagement of snap-hooks not designed to be compatible for the connection.

(h) Due to the significant reduction in the strength of the lifeline/lanyard (in some cases, as much as a 70 percent reduction), the sliding hitch knot should not be used for lifeline/lanyard connections except in emergency situations where no other available system is practical. The “one-and-one” sliding hitch knot should never be used because it is unreliable in stopping a fall. The “two-and-two,” or “three-and-three” knot (preferable), may be used in emergency situations; however, care should be taken to limit free fall distance to a minimum because of reduced lifeline/lanyard strength.

(9) Vertical lifeline considerations. As required by the standard, each employee must have a separate lifeline when the lifeline is vertical. The reason for this is that in multiple tie-offs to a single lifeline, if one employee falls, the movement of the lifeline during the arrest of the fall may pull other employees' lanyards, causing them to fall as well.

(10) Snap-hook considerations.

(a) Required by this standard for all connections, locking snap-hooks incorporate a positive locking mechanism in addition to the spring loaded keeper, which will not allow the keeper to open under moderate pressure without someone first releasing the mechanism. Such a feature, properly designed, effectively prevents roll-out from occurring.

(b) As required by the standard WAC 296-24-88050 (5)(a) the following connections must be avoided (unless properly designed locking snap-hooks are used) because they are conditions which can result in roll-out when a non-locking snap-hook is used:

- Direct connection of a snap-hook to a horizontal lifeline.
- Two (or more) snap-hooks connected to one dee-ring.
- Two snap-hooks connected to each other.
- A snap-hook connected back on its integral lanyard.
- A snap-hook connected to a webbing loop or webbing lanyard.
- Improper dimensions of the dee-ring, rebar, or other connection point in relation to the snap-hook dimensions which would allow the snap-hook keeper to be depressed by a turning motion of the snap-hook.

(11) Free fall considerations. The employer and employee should at all times be aware that a system's maximum arresting force is evaluated under normal use conditions established by the manufacturer, and in no case using a free fall distance in excess of 6 feet (1.8 m). A few extra feet of free fall can significantly increase the arresting force on the employee, possibly to the point of causing injury. Because of this, the free fall distance should be kept at a minimum, and, as required by the standard, in no case greater than 6 feet (1.8 m). To help assure this, the tie-off attachment point to the lifeline or anchor should be located at or above the connection point of the fall arrest equipment to harness. (Since otherwise additional free fall distance is added to the length of the connecting means (i.e. lanyard).) Attaching to the working surface will often result in a free fall greater than 6 feet (1.8 m). For instance, if a 6 foot (1.8 m) lanyard is used, the total free fall distance will be the distance from the working level to the body harness attachment point plus the 6 feet (1.8 m) of lanyard length. Another important consideration is that the arresting force which the fall system must withstand also goes up with greater distances of free fall, possibly exceeding the strength of the system.

WAC 296-24-88050 (Cont.)

(12) Elongation and deceleration distance considerations. Other factors involved in a proper tie-off are elongation and deceleration distance. During the arresting of a fall, a lanyard will experience a length of stretching or elongation, whereas activation of a deceleration device will result in a certain stopping distance. These distances should be available with the lanyard or device's instructions and must be added to the free fall distance to arrive at the total fall distance before an employee is fully stopped. The additional stopping distance may be very significant if the lanyard or deceleration device is attached near or at the end of a long lifeline, which may itself add considerable distance due to its own elongation. As required by the standard, sufficient distance to allow for all of these factors must also be maintained between the employee and obstructions below, to prevent an injury due to impact before the system fully arrests the fall. In addition, a minimum of 12 feet (3.7 m) of lifeline should be allowed below the securing point of a rope grab type deceleration device, and the end terminated to prevent the device from sliding off the lifeline. Alternatively, the lifeline should extend to the ground or the next working level below. These measures are suggested to prevent the worker from inadvertently moving past the end of the lifeline and having the rope grab become disengaged from the lifeline.

(13) Obstruction considerations. The location of the tie-off should also consider the hazard of obstructions in the potential fall path of the employee. Tie-offs which minimize the possibilities of exaggerated swinging should be considered.

(14) Other considerations. Because of the design of some personal fall arrest systems, additional considerations may be required for proper tie-off. For example, heavy deceleration devices of the self-retracting type should be secured overhead in order to avoid the weight of the device having to be supported by the employee. Also, if self-retracting equipment is connected to a horizontal lifeline, the sag in the lifeline should be minimized to prevent the device from sliding down the lifeline to a position which creates a swing hazard during fall arrest. In all cases, manufacturer's instructions should be followed.

[Statutory Authority: RCW 49.17.010, .040, .050. 00-08-078 (Order 99-15), § 296-24-88050, filed 04/04/00, effective 07/01/00.]

WAC 296-24-88055 Appendix D-Existing installations (mandatory).

(1) Use of the appendix.

Appendix D sets out the mandatory building and equipment requirements for applicable permanent installations completed after August 27, 1971, and no later than July 23, 1990 which are exempt from WAC 296-24-880 through 296-24-88020.

Note: All existing installations subject to this Appendix must also comply with WAC 296-24-88010, 296-24-88025, 296-24-88030, 296-24-88035, and Appendix C.

(2) Definitions applicable to this Appendix.

Angulated roping. A system of platform suspension in which the upper wire rope sheaves or suspension points are closer to the plane of the building face than the corresponding attachment points on the platform, thus causing the platform to press against the face of the building during its vertical travel.

ANSI. American National Standards Institute.

Babbitted fastenings. The method of providing wire rope attachments in which the ends of the wire strands are bent back and are held in a tapered socket by means of poured molten babbitt metal.

Brake-disc type. A brake in which the holding effect is obtained by frictional resistance between one or more faces of discs keyed to the rotating member to be held and fixed discs keyed to the stationary or housing member (pressure between the discs being applied axially).

WAC 296-24-88055 (Cont.)

Brake-self-energizing band type. An essentially undirectional brake in which the holding effect is obtained by the snubbing action of a flexible band wrapped about a cylindrical wheel or drum affixed to the rotating member to be held, the connections and linkages being so arranged that the motion of the brake wheel or drum will act to increase the tension or holding force of the band.

Brake-shoe type. A brake in which the holding effect is obtained by applying the direct pressure of two or more segmental friction elements held to a stationary member against a cylindrical wheel or drum affixed to the rotating member to be held.

Building face rollers. A specialized form of guide roller designed to contact a portion of the outer face or wall structure of the building, and to assist in stabilizing the operators' platform during vertical travel.

Continuous pressure. Operation by means of buttons or switches, any one of which may be used to control the movement of the working platform or roof car, only as long as the button or switch is manually maintained in the actuating position.

Control. A system governing starting, stopping, direction, acceleration, speed, and retardation of moving members.

Controller. A device or group of devices, usually contained in a single enclosure, which serves to control in some predetermined manner the apparatus to which it is connected.

Electrical ground. A conducting connection between an electrical circuit or equipment and the earth, or some conducting body which serves in place of the earth.

Guide roller. A rotating, bearing-mounted, generally cylindrical member, operating separately or as part of a guide shoe assembly, attached to the platform, and providing rolling contact with building guideways, or other building contact members.

Guide shoe. An assembly of rollers, slide members, or the equivalent, attached as a unit to the operators' platform, and designed to engage with the building members provided for the vertical guidance of the operators' platform.

Interlock. A device actuated by the operation of some other device with which it is directly associated, to govern succeeding operations of the same or allied devices.

Operating device. A pushbutton, lever, or other manual device used to actuate a control.

Powered platform. Equipment to provide access to the exterior of a building for maintenance, consisting of a suspended power-operated working platform, a roof car, or other suspension means, and the requisite operating and control devices.

Rated load. The combined weight of employees, tools, equipment, and other material which the working platform is designed and installed to lift.

Relay, direction. An electrically energized contactor responsive to an initiating control circuit, which in turn causes a moving member to travel in a particular direction.

Relay, potential for vertical travel. An electrically energized contactor responsive to initiating control circuit, which in turn controls the operation of a moving member in both directions. This relay usually operates in conjunction with direction relays, as covered under the definition, “relay, direction.”

WAC 296-24-88055 (Cont.)

Roof car. A structure for the suspension of a working platform, providing for its horizontal movement to working positions.

Roof-powered platform. A powered platform having the raising and lowering mechanism located on a roof car.

Self-powered platform. A powered platform having the raising and lowering mechanism located on the working platform.

Traveling cable. A cable made up of electrical or communication conductors or both, and providing electrical connection between the working platform and the roof car or other fixed point.

Weatherproof. Equipment so constructed or protected that exposure to the weather will not interfere with its proper operation.

Working platform. The suspended structure arranged for vertical travel which provides access to the exterior of the building or structure.

Yield point. The stress at which the material exhibits a permanent set of 0.2 percent.

Zinced fastenings. The method of providing wire rope attachments in which the splayed or fanned wire ends are held in a tapered socket by means of poured molten zinc.

(3) General requirements.

(a) Design requirements. All powered platform installations for exterior building maintenance completed as of August 27, 1971, but no later than January 25, 1990, must meet all of the design, construction and installation requirements of Part II and III of the "American National Standard Safety Requirements for Powered Platforms for Exterior Building Maintenance ANSI A120.1-1970" and of this Appendix. References must be made to appropriate parts of ANSI A120.1-1970 for detail specifications for equipment and special installations.

(b) Limitation. The requirements of this Appendix apply only to electric-powered platforms. It is not the intent of this appendix to prohibit the use of other types of power. Installation of powered platforms using other types of power is permitted, provided such platforms have adequate protective devices for the type of power used, and otherwise provide for reasonable safety of life and limb to users of equipment and to others who may be exposed.

(c) Types of powered platforms.

(i) For the purpose of applying this appendix, powered platforms are divided into two basic types, Type F and Type T.

(ii) Powered platforms designated as Type F must meet all the requirements in Part II of ANSI A120.1-1970, American National Standard Safety Requirements for Powered Platforms for Exterior Building Maintenance. A basic requirement of Type F equipment is that the work platform is suspended by at least 4 wire ropes and designed so that failure of any one wire rope will not substantially alter the normal position of the working platform. Another basic requirement of Type F equipment is that only one layer of hoisting rope is permitted on winding drums. Type F powered platforms may be either roof-powered or self-powered.

WAC 296-24-88055 (Cont.)

(iii) Powered platforms designated as Type T must meet all the requirements in Part III of ANSI A120.1-1970 American National Standard Safety Requirements for Powered Platforms for Exterior Building Maintenance, except for section 28, Safety Belts and Life Lines. A basic requirement of Type T equipment is that the working platform is suspended by at least 2 wire ropes. Failure of one wire rope would not permit the working platform to fall to the ground, but would upset its normal position. Type T powered platforms may be either roof-powered or self-powered.

(iv) The requirements of this section apply to powered platforms with winding drum type hoisting machines. It is not the intent of this section to prohibit powered platforms using other types of hoisting machines such as, but not limited to, traction drum hoisting machines, air powered machines, hydraulic powered machines, and internal combustion machines. Installation of powered platforms with other types of hoisting machines is permitted, provided adequate protective devices are used, and provided reasonable safety of life and limb to users of the equipment and to others who may be exposed is assured.

(v) Both Type F and Type T powered platforms must comply with the requirements of Appendix C of this standard.

(4) Type F powered platforms.

(a) Roof car, general.

(i) A roof car must be provided whenever it is necessary to move the working platform horizontally to working or storage positions.

(ii) The maximum rated speed at which a power traversed roof car may be moved in a horizontal direction shall be 50 feet per minute.

(b) Movement and positioning of roof car.

(i) Provision must be made to protect against having the roof car leave the roof or enter roof areas not designed for travel.

(ii) The horizontal motion of the roof cars must be positively controlled so as to insure proper movement and positioning of the roof car.

(iii) Roof car positioning devices must be provided to insure that the working platform is placed and retained in proper position for vertical travel and during storage.

(iv) Mechanical stops must be provided to prevent the traversing of the roof car beyond its normal limits of travel. Such stops must be capable of withstanding a force equal to 100 percent of the inertial effect of the roof car in motion with traversing power applied.

(v) The operating device of a power-operated roof car for traversing must be located on the roof car, the working platform, or both, and must be of the continuous pressure weather-proof electric type. If more than one operating device is provided, they must be so arranged that traversing is possible only from one operating device at a time.

(vi) The operating device must be so connected that it is not operable until:

WAC 296-24-88055 (Cont.)

(A) The working platform is located at its uppermost position of travel and is not in contact with the building face or fixed vertical guides in the face of the building; and

(B) All protective devices and interlocks are in a position for traversing.

(c) Roof car stability. Roof car stability must be determined by either items (i) or (ii), whichever is greater.

(i) The roof car must be continuously stable, considering overturning moment as determined by 125 percent rated load, plus maximum dead load and the prescribed wind loading.

(ii) The roof car and its anchorages must be capable of resisting accidental over-tensioning of the wire ropes suspending the working platform and this calculated value must include the effect of one and one-half times the value. For this calculation, the simultaneous effect of one-half wind load must be included, and the design stresses must not exceed those referred to in subsection (3)(a) of this Appendix.

(iii) If the load on the motors is at any time in excess of three times that required for lifting the working platform with its rated load the motor must stall.

(d) Access to the roof car. Safe access to the roof car and from the roof car to the working platform must be provided. If the access to the roof car at any point of its travel is not over the roof area or where otherwise necessary for safety, self-closing, self-locking gates must be provided. Applicable provisions WAC 296-24-735 through 296-24-810 must apply.

(e) Means for maintenance, repair, and storage. Means must be provided to run the roof car away from the roof perimeter, where necessary, and to provide a safe area for maintenance, repairs, and storage. Provisions must be made to secure the machine in the stored position. For stored machines subject to wind forces, see special design and anchorage requirements for “wind forces” in Part II, section 10.5.1.1 of ANSI A120.1-1970 American National Standard Safety Requirements for Powered Platforms for Exterior Building Maintenance.

(f) General requirements for working platforms. The working platform must be of girder or truss construction and must be adequate to support its rated load under any position of loading, and comply with the provisions set forth in section 10 of ANSI A120.1-1970, American National Standard Safety Requirements for Powered Platforms for Exterior Building Maintenance.

(g) Load rating plate. Each working platform must bear a manufacturer's load rating plate, conspicuously posted; stating the maximum permissible rated load. Load rating plates must be made of noncorrosive material and must have letters and figures stamped, etched, or cast on the surface. The minimum height of the letters and figures must be one-fourth inch.

(h) Minimum size. The working platform must have a minimum net width of 24 inches.

(i) Guardrails. Working platforms must be furnished with permanent guard rails not less than 38 inches high, and not more than 45 inches high at the front (building side). At the rear, and on the sides, the rail must not be less than 45 inches high. An intermediate guardrail must be provided around the entire platform between the top guardrail and the toeboard. The top rail must withstand a minimum of 200 pounds pressure.

(j) Toeboards. A four-inch toeboard must be provided along all sides of the working platform.

WAC 296-24-88055 (Cont.)

(k) Open spaces between guardrails and toeboards. The spaces between the intermediate guardrail and platform toeboard on the building side of the working platform, and between the top guardrail and the toeboard on other sides of the platform, must be filled with metallic mesh or similar material that will reject a ball one inch in diameter. The installed mesh must be capable of withstanding a load of 100 pounds applied horizontally over any area of 144 square inches. If the space between the platform and the building face does not exceed eight inches, and the platform is restrained by guides, the mesh may be omitted on the front side.

(l) Flooring. The platform flooring must be of the nonskid type, and if of open construction, must reject a 9/16-inch diameter ball, or be provided with a screen below the floor to reject a 9/16-inch diameter ball.

(m) Access gates. Where access gates are provided, they must be self-closing and self-locking.

(n) Operating device for vertical movement of the working platform.

(i) The normal operating device for the working platform must be located on the working platform and must be of the continuous pressure weatherproof electric type.

(ii) The operating device must be operable only when all electrical protective devices and interlocks on the working platform are in position for normal service and, the roof car, if provided, is at an established operating point.

(o) Emergency electric operative device.

(i) In addition, on roof-powered platforms, an emergency electric operating device must be provided near the hoisting machine for use in the event of failure of the normal operating device for the working platform, or failure of the traveling cable system. The emergency operating device must be mounted in a locked compartment and must have a legend mounted thereon reading: "For Emergency Operation Only. Establish Communication With Personnel on Working Platform Before Use."

(ii) A key for unlocking the compartment housing the emergency operating device must be mounted in a break-glass receptacle located near the emergency operating device.

(p) Manual cranking for emergency operation. Emergency operation of the main drive machine may be provided to allow manual cranking. This provision for manual operation must be designed so that not more than two persons will be required to perform this operation. The access to this provision must include a means to automatically make the machine inoperative electrically while under the emergency manual operation. The design must be such that the emergency brake is operative at or below governor tripping speed during manual operation.

(q) Arrangement and guarding of hoisting equipment.

(i) Hoisting equipment must consist of a power-driven drum or drum contained in the roof car (roof-powered platforms) or contained on the working platform (self-powered platform).

(ii) The hoisting equipment must be power-operated in both up and down directions.

(iii) Guard or other protective devices must be installed wherever rotating shafts or other mechanisms or gears may expose personnel to a hazard.

WAC 296-24-88055 (Cont.)

(iv) Friction devices or clutches must not be used for connecting the main driving mechanism to the drum or drums. Belt or chain-driven machines are prohibited.

(r) Hoisting motors.

(i) Hoisting motors must be electric and of weather-proof construction.

(ii) Hoisting motors must be in conformance with applicable provisions of subdivision (v) of this subsection, Electric Wiring and Equipment.

(iii) Hoisting motors must be directly connected to the hoisting machinery. Motor couplings, if used, must be of steel construction.

(s) Brakes. The hoisting machine(s) must have two independent braking means, each designed to stop and hold the working platform with 125 percent of rated load.

(t) Hoisting ropes and rope connections.

(i) Working platforms must be suspended by wire ropes of either 6 x 19 or 6 x 37 classification, preformed or nonpreformed.

(ii) (Reserved)

(iii) The minimum factor of safety must be 10, and must be calculated by the following formula:

F.= SxN/W
Where
S.= Manufacturer's rated breaking strength of one rope.
N.= Number of ropes under load.
W.= Maximum static load on all ropes with the platform and its rated load at any point of its travel.

(iv) Hoisting ropes must be sized to conform with the required factor of safety, but in no case must the size be less than 5/16 inch diameter.

(v) Winding drums must have at least three turns of rope remaining when the platform has landed at the lowest possible point of its travel.

(vi) The lengthening or repairing of wire rope by the joining of two or more lengths is prohibited.

(vii) The nondrum ends of the hoisting ropes must be provided with individual shackle rods which will permit individual adjustment of rope lengths, if required.

(viii) More than two reverse bends in each rope is prohibited.

(u) Rope tag data. A metal data tag must be securely attached to one of the wire rope fastenings. This data tag must bear the following wire rope data:

(i) The diameter in inches.

WAC 296-24-88055 (Cont.)

(ii) Construction classification.

(iii) Whether nonpreformed or preformed.

(iv) The grade of material used.

(v) The manufacturer's rated breaking strength.

(vi) Name of the manufacturer of the rope.

(vii) The month and year the ropes were installed.

(v) Electrical wiring and equipment.

(i) All electrical equipment and wiring must conform to the requirements of the National Electrical Code, NFPA 70-1987; ANSI C1-1987, except as modified by ANSI A120.1-1970 “American National Standard Safety Requirements for Powered Platforms for Exterior Building Maintenance.” For detail design specifications for electrical equipment, see Part 2, ANSI A120.1-1970.

(ii) All motors and operation and control equipment must be supplied from a single power source.

(iii) The power supply for the powered platform must be an independent circuit supplied through a fused disconnect switch.

(iv) Electrical conductor parts of the power supply system must be protected against accidental contact.

(v) Electrical grounding must be provided.

(A) Provisions for electrical grounding must be included with the power-supply system.

(B) Controller cabinets, motor frames, hoisting machines, the working platform, roof car and roof car track system, and noncurrent carrying parts of electrical equipment, where provided, must be grounded.

(C) The controller, where used, must be so designed and installed that a single ground or short circuit will not prevent both the normal and final stopping device from stopping the working platform.

(D) Means must be provided on the roof car and working platform for grounding portable electric tools.

(E) The working platform must be grounded through a grounding connection in a traveling cable. Electrically powered tools utilized on the working platform must be grounded.

WAC 296-24-88055 (Cont.)

(vi) Electrical receptacles located on the roof or other exterior location must be of a weatherproof type and must be located so as not to be subject to contact with water or accumulated snow. The receptacles must be grounded and the electric cable must include a grounding conductor. The receptacle and plug must be a type designed to avoid hazard to persons inserting or withdrawing the plug. Provision must be made to prevent application of cable strain directly to the plug and receptacle.

(vii) Electric runway conductor systems must be of the type designed for use in exterior locations and must be located so as not to be subject to contact with water or accumulated snow. The conductors, collectors, and disconnecting means must conform to the same requirements as those for cranes and hoists in Article 610 of the National Electrical Code, NFPA 70-1987; ANSI C1-1987. A grounded conductor must parallel the power conductors and be so connected that it cannot be opened by the disconnecting means. The system must be designed to avoid hazard to persons in the area.

(viii) Electrical protective devices and interlocks of the weatherproof type must be provided.

(ix) Where the installation includes a roof car, electric contact(s) must be provided and so connected that the operating devices for the working platform must be operative only when the roof car is located and mechanically retained at an established operating point.

(x) Where the powered platform includes a power-operated roof car, the operating device for the roof car must be inoperative when the roof car is mechanically retained at an established operating point.

(xi) An electric contact must be provided and so connected that it will cause the down direction relay for vertical travel to open if the tension in the traveling cable exceeds safe limits.

(xii) An automatic overload device must be provided to cut off the electrical power to the circuit in all hoisting motors for travel in the up direction, should the load applied to the hoisting ropes at either end of the working platform exceed 125 percent of its normal tension with rated load, as shown on the manufacturer's data plate on the working platform.

(xiii) An automatic device must be provided for each hoisting rope which will cut off the electrical power to the hoisting motor or motors in the down direction and apply the brakes if any hoisting rope becomes slack.

(xiv) Upper and lower directional limit devices must be provided to prevent the travel of the working platform beyond the normal upper and lower limits of travel.

(xv) Operation of a directional limit device must prevent further motion in the appropriate direction, if the normal limit of travel has been reached.

(xvi) Directional limit devices, if driven from the hoisting machine by chains, tapes, or cables, must incorporate a device to disconnect the electric power from the hoisting machine and apply both the primary and secondary brakes in the event of failure of the driving means.

(xvii) Final terminal stopping devices of the working platform:

WAC 296-24-88055 (Cont.)

(A) Final terminal stopping devices for the working platform must be provided as a secondary means of preventing the working platform from over-traveling at the terminals.

(B) The device must be set to function as close to each terminal landing as practical, but in such a way that under normal operating conditions it will not function when the working platform is stopped by the normal terminal stopping device.

(C) Operation of the final terminal stopping device must open the potential relay for vertical travel, thereby disconnecting the electric power from the hoisting machine, and applying both the primary and secondary brakes.

(D) The final terminal stopping device for the upper limit of travel must be mounted so that it is operated directly by the motion of the working platform itself.

(xviii) Emergency stop switches must be provided in or adjacent to each operating device.

(xix) Emergency stop switches must:

(A) Have red operating buttons or handles.

(B) Be conspicuously and permanently marked “Stop.”

(C) Be the manually opened and manually closed type.

(D) Be positively opened with the opening not solely dependent on springs.

(xx) The manual operation of an emergency stop switch associated with an operating device for the working platform must open the potential relay for vertical travel, thereby disconnecting the electric power from the hoisting machine and applying both the primary and secondary brakes.

(xxi) The manual operation of the emergency stop switch associated with the operating device for a power-driven roof car must cause the electrical power to the traverse machine to be interrupted, and the traverse machine brake to apply.

(w) Requirements for emergency communications.

(i) Communication equipment must be provided for each powered platform for use in an emergency.

(ii) Two-way communication must be established between personnel on the roof and personnel on the stalled working platform before any emergency operation of the working platform is undertaken by personnel on the roof.

(iii) The equipment must permit two-way voice communication between the working platform; and

(A) Designated personnel continuously available while the powered platform is in use; and

WAC 296-24-88055 (Cont.)

(B) Designated personnel on roof-powered platforms, undertaking emergency operation of the working platform by means of the emergency operating device located near the hoisting machine.

(iv) The emergency communication equipment must be one of the following types:

(A) Telephone connected to the central telephone exchange system; or

(B) Telephones on a limited system or an approved two-way radio system, provided designated personnel are available to receive a message during the time the powered platform is in use.

(5) Type T powered platforms.

(a) Roof car. The requirements of subsection (4)(a) through (4)(e) of this Appendix must apply to Type T powered platforms.

(b) Working platform. The requirements of subsection (4)(f) through (4)(p) of this Appendix apply to Type T powered platforms.

(i) The working platform must be suspended by at least two wire ropes.

(ii) The maximum rated speed at which the working platform of self-powered platforms may be moved in a vertical direction must not exceed 35 feet per minute.

(c) Hoisting equipment. The requirements of subsection (4)(q) and (r) of this Appendix must apply to Type T powered platforms.

(d) Brakes. Brakes requirements of subsection (4)(s) of this Appendix must apply.

(e) Hoisting ropes and rope connections.

(i) Subsection (4)(t)(i) through (vi) and (viii) of this Appendix must apply to Type T powered platforms.

(ii) Adjustable shackle rods in subsection (4)(t)(vii) of this Appendix must apply to Type T powered platforms, if the working platform is suspended by more than two wire ropes.

(f) Electrical wiring and equipment.

(i) The requirements of subsection (4)(v)(i) through (vi) of this Appendix must apply to Type T powered platforms. “Circuit protection limitation,” “powered platform electrical service system,” all operating services and control equipment must comply with the specifications contained in Part 2, section 26, ANSI A120.1-1970.

(ii) For electrical protective devices the requirements of subsection (4)(v)(i) through (viii) of this Appendix must apply to Type T powered platforms. Requirements for the “circuit potential limitation” must be in accordance with specifications contained in Part 2, section 26, of ANSI A120.1-1970.

WAC 296-24-80055 (Cont.)

(g) Emergency communications. All the requirements of subsection (4)(w) of this Appendix must apply to Type T powered platforms.

[Statutory Authority: RCW 49.17.010, .040, .050. 00-08-078 (Order 99-15), § 296-24-88055, filed 04/04/00, effective 07/01/00.]

WAC 296-24-900 Manlifts.

[Order 73-5, § 296-24-900, filed 5/9/73 and Order 73-4, § 296-24-900, filed 5/7/73.]

WAC 296-24-90001 Definitions.

Handhold (handgrip). A handhold is a device attached to the belt which can be grasped by the passenger to provide a means of maintaining balance.

Open type. One which has a handgrip surface fully exposed and capable of being encircled by the passenger's fingers.

Closed type. A cup-shaped device, open at the top in the direction of travel of the step for which it is to be used, and closed at the bottom into which the passenger may place fingers.

Limit switch. A device, the purpose of which is to cut off the power to the motor and apply the brakes to stop the carrier in the event that a loaded step passes the terminal landing.

Manlift. A device consisting of a power-driven endless belt moving in one direction only, and provided with steps or platforms and handholds attached to it for the transportation of personnel from floor to floor.

Rated speed. Rated speed is the speed for which the device is designed and installed.

Split-rail switch. An electric limit switch operated mechanically by the rollers on the manlift steps. It consists of an additional hinged or “split” rail, mounted on the regular guiderail, over which the step rollers pass. It is spring-loaded in the “split” position. If the step supports no load, the rollers will “bump” over the switch; if a loaded step should pass over the section, the split rail will be forced straight, tripping the switch and opening the electrical circuit.

Step (platform). A step is a passenger carrying unit.

Travel. The travel is the distance between the centers of the top and bottom pulleys.

Statutory Authority: RCW 49.17.010, .040, .050. 00-08-078 (Order 99-15), § 296-24-90001, filed 04/04/00, effective 07/01/00.]
[Statutory Authority: Chapter 49.17 RCW. 94-15-096 (Order 94-07), § 296-24-90001, filed 7/20/94, effective 9/20/94; Order 73-5, § 296-24-90001, filed 5/9/73 and Order 73-4, § 296-24-90001, filed 5/7/73.]

WAC 296-24-90003 General requirements.

(1) Application. These standards apply to the construction, maintenance, inspection, and operation of manlifts in relation to accident causing hazards. Manlifts covered by these standards consist of platforms or brackets and accompanying handholds mounted on, or attached to an endless belt, operating vertically in one direction only and being supported by, and driven through pulleys, at the top and bottom. These manlifts are intended for conveyance of persons only. It is not intended that these standards cover moving stairways, elevators with enclosed platforms (“Paternoster” elevators), gravity lifts, nor conveyors used only for conveying material. These standards apply to manlifts used to carry only personnel trained and authorized by the employer in their use.

(2) Exceptions for new and existing equipment. The purpose of these standards is to provide reasonable safety for life and limb.

(3) Design requirements. All new manlift installations and equipment installed after the effective date of these standards must meet the design requirements of the “American National Safety Standard for Manlifts ANSI A90.1-1969,” and the requirements of this section.

WAC 296-24-90003 (Cont.)

(4) Reference to other codes. The following codes are applicable to this section. Safety Code for Mechanical Power Transmission Apparatus ANSI B15.1-1953 (R 1958); chapter 298-806 WAC Machine safety; chapter 296-24 WAC Part L; Safety Code for Fixed Ladders, ANSI A14.3-1956 and Safety Requirements for Floor and Wall Openings, Railings and Toeboards, ANSI A12.1-1967 and chapter 296-24 WAC Parts J-1 and J-2.

(5) Floor openings.

(a) Allowable size. Floor openings for both the "up" and "down" runs must be not less than 28 inches nor more than 36 inches in width for a 12-inch belt not less than 34 inches nor more than 38 inches for a 14-inch belt; and not less than 36 inches nor more than 40 inches for a 16-inch belt and must extend not less than 24 inches, nor more than 28 inches from the face of the belt.

(b) Uniformity. All floor openings for a given manlift must be uniform in size and must be approximately circular, and each must be located vertically above the opening below it.

(6) Landing.

(a) Vertical clearance. The clearance between the floor or mounting platform and the lower edge for the conical guard above it required by WAC 296-24-90003(7) must not be less than 7 feet 6 inches. Where this clearance cannot be obtained no access to the manlift must be provided and the manlift runway must be enclosed where it passes through such floor.

(b) Clear landing space. The landing space adjacent to the floor openings must be free from obstruction and kept clear at all times. This landing space must be at least 2 feet in width from the edge of the floor opening used for mounting and dismounting.

(c) Lighting and landing. Adequate lighting not less than 5-foot candles, must be provided at each floor landing at all times when the lift is in operation.

(d) Landing surface. The landing surfaces at the entrances and exits to the manlift must be constructed and maintained as to provide safe footing at all times.

(e) Emergency landings. Where there is a travel of 50 feet or more between floor landings, one or more emergency landings must be provided so that there will be a landing (either floor or emergency) for every 25 feet or less of manlift travel.

(i) Emergency landings must be accessible from both the "up" and "down" rungs of the manlift and shall give access to the ladder required in WAC 296-24-90003(12).

(ii) Emergency landings must be completely enclosed with a standard railing and toeboard.

(iii) Platforms constructed to give access to bucket elevators or other equipment for the purpose of inspection, lubrication, and repair may also serve as emergency landings under this rule. All such platforms will then be considered part of the emergency landing and must be provided with standard railings and toeboards.

(7) Guards on underside of floor openings.

(a) Fixed type. On the ascending side of the manlift floor openings must be provided with a bevel guard or cone meeting the following requirements:

(i) The cone must make an angle of not less than 45° with the horizontal. An angle of 60° or greater must be used where ceiling heights permit.

WAC 296-24-90003 (Cont.)

(ii) The lower edge of this guard must extend at least 42 inches outward from any handhold on the belt. It must not extend beyond the upper surface of the floor above.

(iii) The cone must be made of not less than No. 18 U.S. gauge sheet steel or material of equivalent strength or stiffness. The lower edge must be rolled to a minimum diameter of one-half inch and the interior must be smooth with no rivets, bolts or screws protruding.

(b) Floating type. In lieu of the fixed guards specified in WAC 296-24-90003 (7)(a) a floating type safety cone may be used, such floating cones to be mounted on hinges at least 6 inches below the under side of the floor and so constructed as to actuate a limit switch should a force of 2 pounds be applied on the edge of the cone closest to the hinge. The depth of this floating cone need not exceed 12 inches.

(8) Protection of entrances and exits.

(a) Guardrail requirement. The entrances and exits at all floor landings affording access to the manlift must be guarded by a maze (staggered railing) or a handrail equipped with self-closing gates.

(b) Construction. The rails must be standard guardrails with toeboards meeting the provisions of the Safety Requirements for Floor and Wall Openings, Railings and Toeboards, ANSI A12.1-1967 and WAC 296-24-750 through 296-24-75011.

(c) Gates. Gates, if used, must open outward and must be self-closing. Corners of gates must be rounded.

(d) Maze. Maze or staggered openings must offer no direct passage between enclosure and outer floor space.

(e) Except where building layout prevents, entrances at all landings must be in the same relative position.

(f) If located in buildings to which the public has access, such manlift or manlifts must be located in an enclosure protected by self-closing spring-locked doors. Keys to such doors must be limited to authorized personnel.

(9) Guards for openings.

(a) Construction. The floor opening at each landing must be guarded on sides not used for entrance or exit by a standard railing and toeboard or by panels or wire mesh of not less than Number 10 U.S. gage, expanded metal of not less than Number 13 U.S. gage or sheet metal of equivalent strength.

(b) Guardrails in stairwells. When belt manlift is installed in a stairwell a standard guardrail must be placed between the floor openings of the manlift and the stairways.

(c) Height and location. Such rails or guards must be at least forty-two inches in height on the “up” running side and sixty-six inches on the “down” running side. If a guardrail is used the section of the guard above the rail may be of the construction specified in WAC 296-24-90003 (9)(a) or may consist of vertical or horizontal bars which will reject a ball six inches in diameter. Rails or guards must be located not more than one foot from the edge of the floor opening.

WAC 296-24-90003 (Cont.)

(d) Safeguards required. Expanded metal, sheet metal or wood guards must be installed to cover the area from the floor to seven feet above the floor on each exposed side of the belt manlift at each floor landing, so persons cannot place their hands in the area where the step rollers travel.

(10) Bottom arrangement.

(a) Bottom landing. At the bottom landing the clear area must be not smaller than the area enclosed by the guardrails on the floors above, and any wall in front of the down-running side of the belt must be not less than 48 inches from the face of the belt. This space must not be encroached upon by stairs or ladders.

(b) Location of lower pulley. The lower (boot) pulley must be installed so that it is supported by the lowest landing served. The sides of the pulley support must be guarded to prevent contact with the pulley or the steps.

(c) Mounting platform. A mounting platform must be provided in front or to one side of the uprun at the lowest landing, unless the floor level is such that the following requirement can be met: The floor or platform must be at or above the point at which the upper surface of the ascending step completes its turn and assumes a horizontal position.

(d) Guardrails. To guard against persons walking under a descending step, the area on the downside of the manlift must be guarded in accordance with WAC 296-24-90003(8). To guard against a person getting between the mounting platform and an ascending step, the area between the belt and the platform must be protected by a guardrail.

(11) Top arrangements.

(a) Clearance from floor. A top clearance must be provided of at least 11 feet above the top terminal landing. This clearance must be maintained from a plane through each face of the belt to a vertical cylindrical plane having a diameter 2 feet greater than the diameter of the floor opening, extending upward from the top floor to the ceiling on the up-running side of the belt. No encroachment of structural or machine supporting members within this space will be permitted.

(b) Pulley clearance.

(i) There must be a clearance of at least 5 feet between the center of the head pulley shaft and any ceiling obstruction.

(ii) The center of the head pulley shaft must be not less than 6 feet above the top terminal landing.

(c) Emergency grab rail. An emergency grab bar or rail and platform must be provided at the head pulley when the distance to the head pulley is over 6 feet above the top landing, otherwise only a grab bar or rail is to be provided to permit the rider to swing free should the emergency stops become inoperative.

(12) Emergency exit ladder. A fixed metal ladder accessible from both the “up” and “down” run of the manlift must be provided for the entire travel of the manlift. Such ladder must be in accordance with ANSI A14.3-1956, Safety Code for Fixed Ladders and WAC 296-24-810 through 296-24-81013.

(13) Superstructure bracing. Manlift rails must be secured in such a manner as to avoid spreading, vibration, and misalignment.

WAC 296-24-90003 (Cont.)

(14) Illumination.

(a) General. Both runs of the manlift must be illuminated at all times when the lift is in operation. An intensity of not less than 1-foot candle must be maintained at all points. (However, see WAC 296-24-90003 (6)(c) for illumination requirements at landings.)

(b) Control of illumination. Lighting of manlift runways must be by means of circuits permanently tied into the building circuits (no switches), or must be controlled by switches at each landing. Where separate switches are provided at each landing, any switch must turn on all lights necessary to illuminate the entire runway.

(15) Weather protection. The entire manlift and its driving mechanism must be protected from the weather at all times.

[Statutory Authority: RCW 49.17.010, .040, .050, and .060. 04-14-028 (Order 01-12), § 296-24-90003, filed 06/29/04, effective 01/01/2005. Statutory Authority: RCW 49.17.010, .040, .050. 00-08-078 (Order 99-15), § 296-24-90003, filed 04/04/00, effective 07/01/00. Statutory Authority: Chapter 49.17 RCW. 91-24-017 (Order 91-07), § 296-24-90003, filed 11/22/91, effective 12/24/91; Order 76-6, § 296-24-90003, filed 3/1/76; Order 73-5, § 296-24-90003, filed 5/9/73 and Order 73-4, § 296-24-90003, filed 5/7/73.]

WAC 296-24-90005 Mechanical requirements.

(1) Machines, general.

(a) Brakes. Brakes provided for stopping and holding a manlift must be inherently self-engaging, by requiring power or force from an external source to cause disengagement. The brake must be electrically released, and must be applied to the motor shaft for direct-connected units or to the input shaft for belt-driven units. The brake must be capable of stopping and holding the manlift when the descending side is loaded with 250 lb on each step.

(b) Belt.

(i) The belts must be of hard-woven canvas, rubber-coated canvas, leather, or other material meeting the strength requirements of WAC 296-24-90003(3) and having a co-efficient of friction such that when used in conjunction with an adequate tension device it will meet the brake test specified in WAC 296-24-90005 (1)(a).

(ii) The width of the belt must be not less than 12 inches for a travel not exceeding 100 feet, not less than 14 inches for a travel greater than 100 feet but not exceeding 150 feet and 16 inches for a travel exceeding 150 feet.

(iii) A belt that has become torn while in use on a manlift must not be spliced and put back in service.

(iv) Belt fastenings. Belts must be fastened by a lapped splice or must be butt spliced with a strap on the side of the belt away from the pulley. For lapped splices, the overlap of the belt at the splice must be not less than three feet where the total travel of the manlift does not exceed one hundred feet and not less than four feet, if the travel exceeds one hundred feet.

Where butt splices are used the straps must extend not less than three feet on one side of the butt for a travel not in excess of one hundred feet, and four feet for a travel in excess of one hundred feet.

WAC 296-24-90005 (Cont.)

For twelve inch belts, the joint must be fastened with not less than twenty special elevator bolts, each of a minimum diameter of one-quarter inch. These bolts must be arranged symmetrically in five rows so arranged as to cover the area of the joint effectively. The minimum number of bolts for a belt width of fourteen inches must be not less than twenty-three and for belt widths of sixteen inches, the number of bolts must be not less than twenty-seven.

(v) Pulleys. Drive pulleys and idler (boot) pulleys must have a diameter not less than given in Table 1.

TABLE 1

Belt Construction	Minimum Strength (lb. per inch of width)	Minimum Pulley (diameter inches)
5 ply	1500	20
6 ply	1800	20
7 ply	2100	22

Note: Table No. 1 is included solely for the purpose of determining the minimum diameter of pulley required for the listed number of plys of belt construction.

(vi) Pulley protection. The machine must be so designed and constructed as to catch and hold the driving pulley in event of shaft failure.

(2) Speed. Maximum speed. No manlift designed for a speed in excess of 80 feet per minute must be installed.

(3) Platforms or steps.

(a) Minimum depth. Steps or platforms must be not less than 12 inches nor more than 14 inches deep, measured from the belt to the edge of the step or platform.

(b) Width. The width of the step or platform must be not less than the width of the belt to which it is attached.

(c) Distance between steps. The distance between steps must be equally spaced and not less than 16 feet measured from the upper surface of one step to the upper surface of the next step above it.

(d) Angle of step. The surface of the step must make approximately a right angle with the “up” and “down” run of the belt, and must travel in the approximate horizontal position with the “up” and “down” run of the belt.

(e) Surfaces. The upper or working surfaces of the step must be of a material having inherent nonslip characteristics (coefficient of friction not less than 0.5) or must be covered completely by a nonslip tread securely fastened to it.

(f) Strength of step supports. When subjected to a load of 400 pounds applied at the approximate center of the step, step frames, or supports and their guides must be of adequate strength to:

(i) Prevent the disengagement of any step roller.

(ii) Prevent any appreciable misalignment.

(iii) Prevent any visible deformation of the steps or its support.

WAC 296-24-90005 (Cont.)

(g) Prohibition of steps without handholds. No steps must be provided unless there is a corresponding handhold above or below it meeting the requirements of WAC 296-24-90005(4). If a step is removed for repairs or permanently, the handholds immediately above and below it must be removed before the lift is again placed in service.

(4) Handholds.

(a) Location. Handholds attached to the belt must be provided and installed so that they are not less than 4 feet nor more than 4 feet 8 inches above the step tread. These must be so located as to be available on the both "up" and "down" run of the belt.

(b) Size. The grab surface of the handhold must be not less than 4 1/2 inches in width, not less than 3 inches in depth, and must provide 2 inches of clearance from the belt. Fastenings for handholds must be located not less than 1 inch from the edge of the belt.

(c) Strength. The handhold must be capable of withstanding, without damage, a load of 300 pounds applied parallel to the run of the belt.

(d) Prohibition of handhold without steps. No handhold must be provided without a corresponding step. If a handhold is removed permanently or temporarily, the corresponding step and handhold for the opposite direction of travel must also be removed before the lift is again placed in service.

(e) Type. All handholds must be of the closed type.

(5) Up limit stops.

(a) Requirements. Two separate automatic stop devices must be provided to cut off the power and apply the brake when a loaded step passes the upper terminal landing. One of these must consist of a split-rail switch mechanically operated by the step roller and located not more than 6 inches above the top terminal landing. The second automatic stop device may consist of any of the following:

(i) Any split-rail switch placed 6 inches above and on the side opposite the first limit switch.

(ii) An electronic device.

(iii) A switch actuated by a lever, rod, or plate, the latter to be placed on the "up" side of the head pulley so as to just clear a passing step.

(b) Emergency stop switch, treadle type in pit on down side. An emergency stop treadle switch must be placed in the area below the lowest landing on the "down" side. This switch must stop the mechanism if a person should fail to get off at the lowest landing and be ejected from the step as it approaches its position to travel around the boot pulley.

(c) Manual reset location. After the manlift has been stopped by a stop device it must be necessary to reset the automatic stop manually. The device must be so located that a person resetting it must have a clear view of both the "up" and "down" runs of the manlift. It must not be possible to reset the device from any step or platform.

(d) Cut-off point. The initial limit stop device must function so that the manlift will be stopped before the loaded step has reached a point of 24 inches above the top terminal landing.

WAC 296-24-90005 (Cont.)

(e) Electrical requirements.

(i) Where such switches open the main motor circuit directly they must be of the multipole type.

(ii) Where electronic devices are used they must be so designed and installed that failure will result in shutting off the power to the driving motor.

(iii) Where flammable vapors or dusts may be present all electrical installations must be according to chapter 296-24 WAC Part L.

(iv) Unless of the oil-immersed type controller contacts carrying the main motor current must be copper to carbon or equal, except where the circuit is broken at two or more points simultaneously.

(6) Emergency stop.

(a) General. An emergency stop means must be provided.

(b) Location. This stop means must be within easy reach of the ascending and descending runs of the belt.

(c) Operation. This stop means must be so connected with the control lever or operating mechanism that it will cut off the power and apply the brake when pulled in the direction of travel.

(d) Rope. If rope is used, it must be not less than three-eighths inch in diameter. Wire rope, unless marlin-covered, must not be used.

(7) Instruction and warning signs.

(a) Instruction signs at landings or belts. Signs of conspicuous and easily read style giving instructions for the use of the manlift must be posted at each landing or stenciled on the belt.

(i) Such signs must be of letters not less than 1 inch in height and of a color having high contrast with the surface on which it is stenciled or painted (white or yellow on black or black on white or gray).

(ii) The instructions must read approximately as follows:

Face the belt.
Use the handholds.
To stop-pull rope.

(b) Top floor warning sign and light.

(i) At the top floor an illuminated sign must be displayed bearing the following wording:

"TOP FLOOR-GET OFF"

Signs must be in block letters not less than 2 inches in height. This sign must be located within easy view of an ascending passenger and not more than 2 feet above the top terminal landing.

WAC 296-24-90005 (Cont.)

(ii) In addition to the sign required by WAC 296-24-90005(7), a red warning light of not less than 40-watt rating must be provided immediately below the upper landing terminal and so located as to shine in the passenger's face.

(c) Bottom of manlift warning signs, light and buzzer.

(i) Sign or light. A sign or light warning any passengers they are approaching the bottom landing must be posted above bottom landing in a conspicuous place. Sign or light to be similar in size to top warning light and sign noted above.

(ii) An electric buzzer. An electric buzzer must be installed five feet above the bottom landing on the down side to warn any riders they are approaching the bottom landing and the buzzer must be activated automatically by the weight of a load on a step.

(d) Visitor warning. A conspicuous sign having the following legend-AUTHORIZED PERSONNEL ONLY-must be displayed at each landing. The sign must be of block letters not less than 2 inches in height and must be of a color offering high contrast with the background color.

[Statutory Authority: RCW 49.17.010, .040, .050. 00-08-078 (Order 99-15), § 296-24-90005, filed 04/04/00, effective 07/01/00. Statutory Authority: Chapter 49.17 RCW. 94-15-096 (Order 94-07), § 296-24-90005, filed 7/20/94, effective 9/20/94; 91-24-017 (Order 91-07), § 296-24-90005, filed 11/22/91, effective 12/24/91; Order 74-27, § 296-24-90005, filed 5/7/74; Order 73-5, § 296-24-90005, filed 5/9/73 and Order 73-4, § 296-24-90005, filed 5/7/73.]

WAC 296-24-90007 Operating rules.

(1) Proper use of manlifts. No freight, packaged goods, pipe, lumber, or construction materials of any kind must be handled on any manlift.

[Statutory Authority: RCW 49.17.010, .040, .050. 00-08-078 (Order 99-15), § 296-24-90007, filed 04/04/00, effective 07/01/00. Order 73-5, § 296-24-90007, filed 5/9/73 and Order 73-4, § 296-24-90007, filed 5/7/73.]

WAC 296-24-90009 Periodic inspection.

(1) Frequency. All manlifts must be inspected by a competent designated person at intervals of not more than 30 days. Limit switches must be checked weekly. Manlifts found to be unsafe must not be operated until properly repaired.

(2) Items covered. This periodic inspection must cover but is not limited to the following items:

Steps.
Step fastenings.
Rails.
Rail supports and fastenings.
Rollers and slides.
Belt and belt tension.
Handholds and fastenings.
Floor landings.
Guardrails.
Lubrication.
Limit switches.
Warning signs and lights.
Illumination.
Drive pulley.
Bottom (boot) pulley and clearance.
Pulley supports.
Motor.

WAC 296-24-90009 (Cont.)

Driving mechanism.
Brake.
Electrical switches.
Vibration and misalignment.
"Skip" on up or down run when mounting step (indicating worn gears).

(3) Inspection log. A written record must be kept of findings at each inspection. Records of inspection must be made available to the director of labor and industries or his/her duly authorized representative.

[Statutory Authority: RCW 49.17.010, .040, .050. 00-08-078 (Order 99-15), § 296-24-90009, filed 04/04/00, effective 07/01/00. Statutory Authority: Chapter 49.17 RCW. 94-15-096 (Order 94-07), § 296-24-90009, filed 7/20/94, effective 9/20/94; Order 73-5, § 296-24-90009, filed 5/9/73 and Order 73-4, § 296-24-90009, filed 5/7/73.]