WISHA Department of Labor & Industries

SAFETY & HEALTH Core Rules

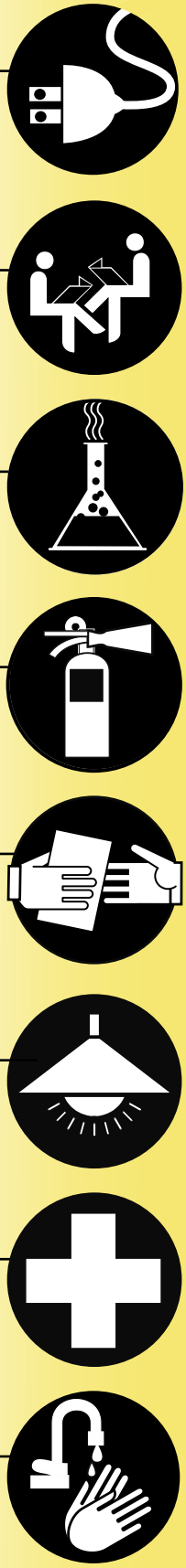

Chapter 296-800 WAC

November 2004 Edition

Washington Industrial Safety & Health Act

Department of LABOR AND INDUSTRIES

F414-059-000

11/2004 printing

Standards Update to

Chapter 296-800 WAC, Safety and Health Core Rules

Issue Date 11/2004
Effective Date 11/1/2004

The Department of Labor and Industries has adopted changes in chapter 296-800 WAC, Safety and Health Core Rules. The department has rewritten and clarified the requirements relating to signs and color codes. This rulemaking is part of our goal to rewrite all of WISHA's general occupational safety and health rules for clarity. The department moved the requirements relating to biological hazards into WAC 296-800-11045, *Protect employees from biological agents*, and eliminated unnecessary and outdated requirements.

Instructions:

Replace any current books with the attached book.

To receive future updates of this standard and all other Department of Labor and Industries safety and health standards electronically, please sign up on the WISHA Listserv (http://www.lni.wa.gov/Safety/Rules/default.htm). By subscribing to the Listserv, you will also receive rule updates, hearing notices, and informational packets for all safety and health rules.

Also available on the WISHA web site:

- WISHA Core Rules
- Other General WISHA Rules
- Industry and Task-specific Rules
- Proposed rules and hearings
- Newly adopted rules and new rule information
- WISHA Regional Directives (WRDs)
- WISHA Interim Operations and Interpretive Memoranda (WIIM)
- Memoranda of Understanding (MOU)

Quick Reference

WAC Number	Title of Rule	Page
296-800-100	Introduction	100-1
296-800-110	Employer Responsiblities: Safe Workplace	110-1
296-800-120	Employee Responsibilities	120-1
296-800-130	Safety Committees and Safety Meetings	130-1
296-800-140	Accident Prevention Program (APP)	140-1
296-800-150	First Aid	150-1
296-800-160	Personal Protective Equipment (PPE)	160-1
296-800-170	Employer Chemical Hazard Communication	170-1
296-800-180	Material Safety Data Sheets (MSDSs) as Exposure Records	180-1
296-800-190	Safety Bulletin Board	190-1
298-800-200	WISHA Poster	200-1
296-800-210	Lighting	210-1
296-800-220	Housekeeping, Drainage, and Storage	220-1
296-800-230	Drinking Water, Bathrooms, Washing Facilities, & Waste Disposal	230-1
296-800-240	Environmental Tobacco Smoke	240-1
296-800-250	Stairs and Stair Railings	250-1
296-800-260	Floor Openings, Floor Holes & Open-sided Floors	260-1
296-800-270	Workplace Structural Integrity	270-1
296-800-280	Basic Electrical	280-1
296-800-300	Portable Fire Extinguishers	300-1
296-800-310	Exit Routes and Employee Alarm Systems	310-1
296-800-320	Accident Reporting & Investigating	320-1
296-800-330	Releasing Accident Investigation Reports	330-1
296-800-340	Protecting the Identity of the Source of Confidential Information	340-1
296-800-350	WISHA Appeals, Penalties & Other Procedural Rules	350-1
296-800-360	Using Standards from National Organizations & Federal Agencies	360-1
296-800-370	Definitions	370-1
	Resource Section	R-1
	Index	IN-1
	Statutory Authority	SA-1

http://www.lni.wa.gov/

1•800•4BE SAFE (1•800•423•7233)

Contents

Introduction 100-1

About Workplace Safety and Health Core Rules 1
About WISHA 2
How is each rule organized 6

296-800-110 Employer Responsibilities: Safe Workplace 110-1

296-800-11005 Provide a workplace free from recognized hazards 3
296-800-11010 Provide and use means to make your workplace safe 3
296-800-11015 Prohibit employees from entering, or being in, any workplace that isn't safe 4
296-800-11020 Construct your workplace so it's safe 4
296-800-11025 Prohibit alcohol and narcotics from your workplace 4
296-800-11030 Prohibit employees from using tools and equipment that aren't safe 5
296-800-11035 Establish, supervise and enforce rules that lead to a safe and healthy work environment that are effective in practice 5
296-800-11040 Control chemical agents 6
296-800-11045 Protect employees from biological agents 6

296-800-120 Employee Responsibilities 120-1

296-800-12005 Employee Responsibilities 1

296-800-130 Safety Committees & Safety Meetings 130-1

296-800-13020 Establish and conduct safety committees 2
296-800-13025 Follow these rules to conduct safety meetings 4

296-800-140 Accident Prevention Program 140-1

296-800-14005 Develop a formal, written Accident Prevention Program (APP) ... 2
296-800-14020 Develop, supervise, implement, and enforce safety and health training programs that are effective in practice 4
296-800-14025 Make sure your Accident Prevention Program is effective in practice 5

Contents

296-800-150 First Aid 150-1

296-800-15005 Make sure that first-aid trained personnel are available to provide quick and effective first aid 3

296-800-15020 Make sure appropriate first-aid supplies are readily available 7

296-800-15030 Make sure emergency washing facilities are functional and readily accessible 8

296-800-15035 Inspect and activate your emergency washing facilities 11

296-800-15040 Make sure supplemental flushing equipment provides sufficient water 12

296-800-160 Personal Protective Equipment (PPE) 160-1

296-800-16005 Do a hazard assessment for PPE 3

296-800-16010 Document your hazard assessment for PPE 4

296-800-16015 Select appropriate PPE for your employees 4

296-800-16020 Provide PPE to your employees 6

296-800-16025 Train your employees to use PPE 7

296-800-16030 Retrain employees to use PPE, if necessary 7

296-800-16035 Document PPE training 8

296-800-16040 Require your employees to use necessary PPE on the job 8

296-800-16045 Keep PPE in safe and good condition 9

296-800-16050 Make sure your employees use appropriate eye and face protection 10

296-800-16055 Make sure your employees use appropriate head protection ... 11

296-800-16060 Make sure your employees use appropriate foot protection 12

296-800-16065 Make sure your employees use appropriate hand protection ... 13

296-800-16070 Make sure your employees are protected from drowning 14

296-800-170 Employer Chemical Hazard Communication 170-1

Employer Chemical Hazard Communication 1

296-800-17005 Develop, implement, maintain and make available a written Chemical Hazard Communication Program 5

Contents

296-800-17007 Include multiemployer workplaces in your program if necessary....6
296-800-17010 Identify and list all the hazardous chemicals present in your workplace....8
296-800-17015 Obtain and maintain Material Safety Data Sheets (MSDSs) for each hazardous chemical used....9
296-800-17020 Make sure that Material Safety Data Sheets (MSDSs) are readily accessible to your employees and NIOSH....12
296-800-17025 Label containers holding hazardous chemicals....13
296-800-17030 Inform and train your employees about hazardous chemicals in your workplace....17
296-800-17035 Follow these rules for laboratories using hazardous chemicals....20
296-800-17040 Follow these rules for handling chemicals in factory-sealed containers....21

The Department must:

296-800-17045 Translate certain chemical hazard communication documents upon request....22
296-800-17050 Attempt to obtain a Material Safety Data Sheet (MSDS) upon request....22

Exemptions:

296-800-17055 Items or chemicals exempt from the rule, and exemptions from labeling....23

296-800-180 Material Safety Data Sheets (MSDSs) as Exposure Records....180-1
Material Safety Data Sheets (MSDSs) as Exposure Records....1
296-800-18005 Preserve exposure records for at least 30 years....3
296-800-18010 Inform current employees of exposure records....4
296-800-18015 Provide access to exposure records....5
296-800-18020 Transfer records when ceasing to do business....7
296-800-190 Safety Bulletin Board....190-1
296-800-19005 Provide a safety bulletin board in your workplace....1

Contents

296-800-200 WISHA Poster 200-1
296-800-20005 Post and keep a WISHA poster at your workplace 1

296-800-210 Lighting 210-1
296-800-21005 Provide and maintain adequate lighting 1

296-800-220 Housekeeping, Drainage, & Storage 220-1
296-800-22005 Keep your workplace clean 3
296-800-22010 Sweep and clean your workplace to minimize dust 3
296-800-22015 Keep your workplace free of obstacles that interfere with cleaning 3
296-800-22020 Control pests in your workplace 4
296-800-22022 Make sure floors are maintained in a safe condition 5
296-800-22025 Keep your workroom floors dry, when practical 5
296-800-22030 Provide proper drainage 6
296-800-22035 Store things safely 6
296-800-22040 Control vegetation in your storage areas 7

296-800-230 Drinking Water, Bathrooms, Washing Facilities, & Waste Disposal 230-1
296-800-23005 Provide safe drinking (potable) water in your workplace 4
296-800-23010 Clearly mark the water outlets that are not-fit-for-drinking (non-potable) 5
296-800-23015 Make sure that systems delivering not-fit-for-drinking (non-potable) water prevent backflow into drinking water systems 7
296-800-23020 Provide bathrooms for your employees 7
296-800-23025 Provide convenient, and clean washing facilities 9
296-800-23040 Make sure eating areas are safe and healthy 9
296-800-23045 Follow these requirements if you provide food service to your employees 10
296-800-23050 Dispose of garbage and waste safely 10
296-800-23055 Remove garbage and waste in a way that doesn't create a hazard 11

Contents

296-800-23060 Provide a separate lunchroom if employees are exposed to toxic substances if they are allowed to eat and drink on the job 11
296-800-23065 Provide showers when required for employees working with chemicals 12
296-800-23070 Provide change rooms when required 13
296-800-23075 Make sure work clothes you provide are dry 13

296-800-240 Environmental Tobacco Smoke 240-1
296-800-24005 Control tobacco smoke in your building 2
296-800-24010 Control the tobacco smoke that comes in from the outside 4

296-800-250 Stairs & Stair Railings 250-1
296-800-25005 Provide fixed stairs where required 2
296-800-25010 Provide stairs that minimize hazards 4
296-800-25015 Provide handrails and stair railings 4

296-800-260 Floor Openings, Floor Holes & Open-sided Floors 260-1
296-800-26005 Guard or cover floor openings and floor holes 2
296-800-26010 Protect open-sided floors and platforms 5

296-800-270 Workplace Structural Integrity 270-1
296-800-27005 Not overload floors or roofs 2
296-800-27010 Make sure that floors are safe 2
296-800-27015 Make sure floors can support equipment that moves or has motion 3
296-800-27020 Post approved load limits (weight limits) for floors 3

296-800-280 Basic Electrical 280-1
296-800-28005 Inspect all electrical equipment your employees use to make sure the equipment is safe 4
296-800-28010 Make sure all electrical equipment is used for its approved or listed purpose 5

Contents

296-800-28015 Make sure electrical equipment used or located in wet or damp locations is designed for such use 6
296-800-28020 Make sure electrical equipment that isn't marked by the manufacturer can't be used 7
296-800-28022 Identify disconnecting means 8
296-800-28025 Maintain electrical fittings, boxes, cabinets and outlets in good condition 9
296-800-28030 Maintain all flexible cords and cables in good condition and use safely 11
296-800-28035 Guard electrical equipment to prevent your employees from electrical hazards 16
296-800-28040 Make sure electrical equipment is effectively grounded 18
296-800-28045 Make sure electrical equipment has overcurrent protection 22

296-800-290 Portable Ladders: Metal and Wooden 290-1

Portable Metal Ladders:

296-800-29005 Inspect your portable metal ladders periodically 3
296-800-29010 Make sure your portable metal ladders are kept in good condition 4
296-800-29015 Use your portable metal ladders safely 5

Portable Wooden Ladders:

296-800-29020 Inspect your portable wooden ladders frequently 7
296-800-29025 Make sure your portable wooden ladders are kept in a good condition 7
296-800-29030 Use your portable wooden ladders safely and for their intended purpose 8
296-800-29035 Safely use a portable wooden ladder when working more than 25 feet above ground 10
296-800-29040 Use wooden stepladders safely 10

296-800-300 Portable Fire Extinguishers 300-1

296-800-30005 Provide portable fire extinguishers in your workplace 3
296-800-30010 Select and distribute portable fire extinguishers in your wokplace 3

Contents

296-800-30015 Make sure that portable fire extinguishers are kept fully charged, in operable condition, and left in their designated places 5
296-800-30020 Inspect and test all portable fire extinguishers 5
296-800-30025 Train your employees to use portable fire extinguishers 9

296-800-310 Exit Routes and Employee Alarm Systems .. 310-1
296-800-31005 Provide an adequate number of exit routes 3
296-800-31010 Make sure that exit routes are large enough 4
296-800-31015 Make sure that exit routes meet their specific design and construction requirements 5
296-800-31020 Make sure that each exit route leads outside 6
296-800-31025 Provide unobstructed access to exit routes 7
296-800-31030 Exit doors must be readily opened from the inside 7
296-800-31035 Use side-hinged doors to connect to exit routes 8
296-800-31040 Provide outdoor exit routes that meet these requirements 8
296-800-31045 Minimize danger to employees while they are using emergency exit routes 9
296-800-31050 Mark exits adequately 9
296-800-31053 Provide adequate lighting for exit routes and signs 10
296-800-31055 Maintain the fire retardant properties of paints or other coatings 10
296-800-31060 Maintain emergency safeguards 11
296-800-31065 Maintain exit routes during construction and repair 11
296-800-31067 Provide doors in freezer or refrigerated rooms that open from the inside 12
296-800-31070 Install and maintain an appropriate employee alarm system ... 12
296-800-31075 Establish procedures for sounding emergency alarms 14
296-800-31080 Test the employee alarm system 15

296-800-320 Accident Reporting & Investigating 320-1
296-800-32005 Report the death, probable death of any employee, or the in-patient hospitalization of 2 or more employees within 8 hours 2
296-800-32010 Make sure that any equipment involved in an accident isn't moved 3

Contents

296-800-32015 Assign people to assist the Department of Labor and Industries 4
296-800-32020 Conduct a preliminary investigation for all serious injuries 5
296-800-32025 Document the investigation findings 6

296-800-330 Releasing Accident Investigation Reports .. 330-1

296-800-340 Protecting the Identity of the Source of Confidential Information 340-1

296-800-350 WISHA Appeals, Penalties, & Other Procedural Rules 350-1

WISHA Inspection and Citations

296-800-35002 Types of workplace inspections 6
296-800-35004 Scheduling inspections 7
296-800-35006 Inspection techniques 8
296-800-35008 Response to complaints submitted by employees or their representatives 8
296-800-35010 Citations mailed after an inspection 9
296-800-35012 Employees (or their representatives) can request a Citation and Notice 10
296-800-35016 Posting a citation and notice and employee complaint information 11

Civil Penalties for Violating WISHA Requirements

296-800-35018 Reasons to assess civil penalties 11
296-800-35020 Minimum penalties 12

How Civil Penalties are Calculated

296-800-35022 Base penalty calculations - severity and probability 12
296-800-35024 Severity rate determination 12
296-800-35026 Probability rate determination 14
296-800-35028 Determining the gravity of a violation 15
296-800-35030 Base penalty adjustments 16
296-800-35032 Types of base penalty adjustments 16
296-800-35038 Minimum and Maximum adjusted base penalty amount 17
296-800-35040 Reasons for increasing civil penalty amounts 18

Contents

Certify that Violations have been Abated

296-800-35042 Employers must certify that violations have been abated 20
296-800-35044 For willful, repeated, or serious violations, submit additional documentation 21
296-800-35046 Submitting correction action plans 21
296-800-35048 Submit progress reports to the Department when required 22
296-800-35049 WISHA determines the date by which abatement documents must be submitted 23
296-800-35050 Inform affected employees and their representatives of abatement actions you have taken 23
296-800-35052 Tag cited moveable equipment to warn employees of a hazard 24

Requesting more Time to Comply

296-800-35056 You can request more time to comply 26
296-800-35062 WISHA's response to your request for more time 28
296-800-35063 Post the Department's response 28
296-800-35064 A hearing can be requested about the Department's response 29
296-800-35065 Post the Department's hearing notice 30
296-800-35066 Hearing procedures 30
296-800-35072 Post the hearing decision 31

Requesting an Appeal of WISHA Citations and Correction Notices

296-800-35076 Employers and employees can request an appeal of a Citation and Notice 31
296-800-35078 Await the Department's response to your appeal request 33
296-800-35080 Department actions when reassuming jurisdiction over an appeal 34
296-800-35082 Appealing a corrective notice 34
296-800-35084 Notify employees 35

296-800-360 Using Standards from National Organizations & Federal Agencies 360-1

296-800-36005 Comply with standards of national organizations or federal agencies when referenced in WISHA rules 1

Contents

296-800-370 Definitions 370-1

Resource Section

Helpful Tools

Accident Investigation Report R-3
Accident/Incident Table R-5
Additional Program Requirements R-7
Employee Rights Under WISHA Table R-9
Hazard Assessment Checklist R-11
Report of a Workplace Hazard R-15
Safety Meeting Minutes R-17
Sample Hazardous Chemical Communication Program R-19
Sample Labels for Hazardous Chemical Containers R-25
Sample Letter for Requesting a Material Safety Data Sheet (MSDS) R-27
Training Documentation Form R-29

Other Resources

Complete List of Safety & Health Rules R-31
Links to Other Information R-39
OSHA/WISHA Rules Comparison R-43
Service Locations for Labor & Industries R-45
Requesting Information R-49

Index IN-1

Statutory Authority SA-1

WAC 296-800-100

The WISHA Core Rules:

Your foundation for a safe and healthful workplace. This book contains 26 basic safety and health rules that affect all employers and should cover almost everything small, nonmanufacturing employers need for a safe and healthful workplace. These core rules include requirements for your Accident Prevention Program, Personal Protective Equipment, First-Aid, and Hazard Communication Program.

Note:

You may need to comply with other WISHA Rules. For a complete list of WISHA rules, see the Resource Section of this book.

Why does workplace safety and health matter to you?

On average, two people lose their lives every week in job-related incidents in Washington state. Each year, more than 250,000 workers' compensation claims are accepted for work-related injuries and illnesses. Medical care and wage replacement for these injured workers costs more than a billion dollars. The indirect costs of workplace injuries are even larger in terms of lost quality of life, personal financial ruin, operating costs of business, and decreased profitability. Employers and employees who work together to identify and control hazards on the job can save lives and money while improving business and productivity.

What are L&I and WISHA?

The Department of Labor and Industries (L&I) is a state agency that provides many different services:

- Workplace safety and health, including inspections and enforcement, consultation, technical assistance, training, education and grants (WISHA).
- Workers' compensation (or industrial insurance), including claims management, rate setting, medical payments, and research.
- Specialty compliance services, including contractor registration, electrical inspections, boiler and elevator inspections, apprenticeship programs and employment standards.

-Continued-

WAC 296-800-100 (Continued)

Many of these services are available from L&I's 22 regional offices (see the Resource Section of this book for a list of regional offices).

In 1973, the legislature passed the Washington Industrial Safety and Health Act or WISHA (Revised Code of Washington (chapter 49.17 RCW)). WISHA requires employers to provide safe and healthful workplaces for all employees. It gives L&I the responsibility to establish and enforce workplace safety and health rules. These rules are the Washington Administrative Code (WAC).

How does WISHA work?

WISHA covers nearly all employers and employees in Washington, including employees who work for the state, counties, and cities. L&I inspectors enforce WISHA rules by inspecting workplaces without advance notice including investigations of work-related deaths, injuries, and employees' complaints. When WISHA inspectors find a violation in a workplace, they issue a citation to the employer and a penalty may be attached. If you have questions about whether you are covered by WISHA, call 1-800-4BE SAFE (1-800-423-7233) or a local office of L&I.

What is OSHA and its relationship to WISHA?

The U.S. Congress created the Occupational Safety and Health Administration (OSHA) in 1971 to develop and enforce workplace safety and health rules throughout the country. States may choose to run their own safety and health programs as long as they are at least as effective as OSHA. Washington state has chosen to run its own program and most employers in the state, therefore, are subject to enforcement by L&I and not by federal OSHA.

In Washington state, OSHA covers workplaces with federal employees, nonfederal employees working on federal reservations and military bases, employees working on floating worksites (floating dry docks, fishing boats, construction barges), and employees working for tribal employers on tribal lands.

-Continued-

WAC 296-800-100 (Continued)

Does WISHA apply to you?

WISHA applies to almost every employer and employee in Washington. WISHA applies to you if:

- You hire someone to work for you as an employee, including workers from a temporary agency.
- You are hired to work for someone as their employee.
- You own your own business or you are a corporate officer and have elected industrial insurance coverage for yourself.
- You have a contract with someone else that primarily involves personal labor, even though you aren't required to pay industrial insurance or unemployment insurance premiums.
- You volunteer your personal labor, or you have volunteers working for you who receive any benefit or compensation.

If you have any questions about your particular situation, call **1-800-4BE SAFE (1-800-423-7233)** or contact your local office of L&I for help. See the Resource Section of this book for a complete list of L&I offices.

Are there other safety and health rules I need to know about?

In addition to the rules in the WISHA Safety and Health Core Rules book, there are other general WISHA rules that may apply to employers, depending upon the industry and workplace activities. See the resources section of this book for a complete list of WISHA rules or go to the website for all the state rules administered by L&I at http://www.wa.gov/lni/home/wacs.htm. If you have questions about these rules or would like copies of them, call 1-800-4BE SAFE (1-800-423-7233) or your local office of L&I.

-Continued-

WAC 296-800-100 (Continued)

How do the WISHA rules relate to fire, building and electrical codes?

Fire codes: WISHA rules contain basic requirements for portable fire extinguishers, exit routes, housekeeping, storage, stairs and electrical hazards for the protection of employees in your workplace. The rules contained in this book are the most basic requirements to make sure that as an employer you provide a safe and healthy work environment. However, these aren't the only rules regarding the requirements for portable fire extinguishers, exit routes, housekeeping, storage, stairs and electrical equipment. The fire marshall and local fire authorities enforce the Uniform Fire Code (UFC). WISHA and UFC requirements differ in some areas, for example UFC requires exit sign lettering to be 6” or more and WISHA only states that the letters have to be clearly visible. Fire codes have more detailed and extensive requirements for the protection of the public than WISHA. Some UFC codes overlap with WISHA requirements.

Building and electrical codes: WISHA rules are minimum requirements regardless of when the building was built or remodeled. Buildings must also comply with building and electrical codes at the time of construction. If you remodel, you must comply with the building and electrical codes applicable at that time. Building authorities and electrical inspection authorities enforce rules from the Uniform Building Code (UBC), and the National Electrical Code (NEC).

You are encouraged to call your local fire, building or electrical authority. For more information on the requirements in your area look in the government section of your phone book. Copies of these codes are available at your local library.

How can WISHA help employers and employees?

Employers can ask WISHA safety and health consultation staff for free, confidential consulting services in your workplace. WISHA safety and health professionals can examine your workplace and make recommendations about how to comply with WISHA rules. If the consultant finds hazards, the employer will be given a reasonable period of time to correct the hazard without citation or penalty.

-Continued-

WAC 296-800-100 (Continued)

Sometimes you might have to wait for an appointment because of the demand for these services. You still must provide a safe workplace while you wait for a consultation.

WISHA offers a wide variety of free services:

- Safety and health workshops held in locations throughout the state.
- A comprehensive safety and health video lending library.
- Safety and health publications geared for both employer and employee.
- Website with on-line publications and learning opportunities.

Note:

By law, WISHA consultants don't have any enforcement authority.

Link:

For more information, call 1-800-4BE SAFE (1-800-423-7233) or visit http://www.wa.gov/lni/home/training.htm.

Introduction

WAC 296-800-100

How is each rule organized?

The following 2 pages illustrate how the rules are organized.

1. **Title:**

   Indicates the rule topic.

2. **Wac Numbers:**

   Washington Administrative Code (WAC) numbers have been assigned to each rule.

3. **Summary:**

   This is a place holder that tells you where you are, which will either be summary, introduction, or rule.

4. **Your responsibility:**

   Provides an overview of rule obligations and requirements.

5. **You must:**

   Provides requirements of the rule.

6. **Tab icon:**

   Provides a graphic description of the rules within a topic area.

1 # Accident Prevention Program

2 WAC 296-800-140

3 ## Summary

4 **YOUR RESPONSIBILITY:**

To establish, supervise and enforce an Accident Prevention Program that is effective in practice

5 **You must**

Do a hazard assessment for PPE
WAC 296-800-14005 ..... Page 140- 2

Document your hazard assessment for PPE
WAC 296-800-14015 ..... Page 140- 3

Select appropriate PPE
WAC 296-800-14020 ..... Page 140- 3

Provide PPE to your employees
WAC 296-800-14025 ..... Page 140- 4

Accident Prevention Program

6

How is each rule organized? (Continued)

You'll come across other information in the Core Rules Book in the form of icons and visual aides. The following is a list of these icons and visual aides:

Bulleting:

Bullets are used to organize and break up information into manageable pieces.

Note:

Provides additional useful information.

Helpful Tool:

These are optional aides such as forms and checklists to help you follow the rule.

Definition:

Terms that are defined within the text of a rule.

Link:

Internet website addresses that may be of interest and assistance.

Exemption:

Circumstances where the rule doesn't apply.

WISHA phone number & website:

Located at the bottom of each page for easy reference.

Page numbers:

Located at the bottom of each page, includes the 3 numbers representing the WAC section followed by a page number for easy reference. (140-1 is an example.)

Issue Date:

Located on the book's title page and below every page number.

Employer Responsibilities: Safe Workplace

WAC 296-800-110

Summary

YOUR RESPONSIBILITY:

To provide a safe and healthy workplace free from recognized hazards

Important:

Use these rules where there are no specific rules applicable to the particular hazard.

You must

Provide a workplace free from recognized hazards
WAC 296-800-11005 ..... Page 110-3

Provide and use means to make your workplace safe
WAC 296-800-11010 ..... Page 110-3

Prohibit employees from entering, or being in, any workplace that isn't safe
WAC 296-800-11015 ..... Page 110-4

Construct your workplace so it is safe
WAC 296-800-11020 ..... Page 110-4

Prohibit alcohol and narcotics from your workplace
WAC 296-800-11025 ..... Page 110-4

Prohibit employees from using tools and equipment that aren't safe
WAC 296-800-11030 ..... Page 110-5

Establish, supervise, and enforce rules that lead to a safe and healthy work environment that are effective in practice
WAC 296-800-11035 ..... Page 110-5

-Continued-

Employer Responsibilities: Safe Workplace

WAC 296-800-110

Summary

WAC 296-800-110 (Continued)

Control chemical agents
WAC 296-800-11040 ..... Page 110-6

Protect employees from biological agents
WAC 296-800-11045 ..... Page 110-6

Note:

Employees may discuss and participate in any WISHA safety and health related practice and may refuse to perform dangerous tasks without fear of discrimination. Discrimination includes: dismissal, demotion, loss of seniority, denial of a promotion, harassment, etc. See Chapter 296-360 WAC, Discrimination pursuant to RCW 49.17.160, for a complete description of discrimination and the department's responsibility to protect employees.

Employer Responsibilities: Safe Workplace

WAC 296-800-110

Rule

WAC 296-800-11005

Provide a workplace free from recognized hazards

You must

- Provide your employees a workplace free from recognized hazards that are causing, or are likely to cause, serious injury or death.

Note:

A hazard is recognized if it is commonly known in the employer's industry, or if there is evidence that the employer knew or should have known of the existence of the hazard, or if it can be established that any reasonable person would have recognized the hazard.

WAC 296-800-11010

Provide and use means to make your workplace safe

You must

- Provide and use safety devices, safeguards, and use work practices, methods, processes, and means that are reasonably adequate to make your workplace safe.
  - Don't remove, displace, damage, destroy or carry off any safety device, safeguard, notice or warning, furnished for use in any employment or place of employment.
  - Don't interfere with use of any of the above.
  - Don't interfere with the use of any method or process adopted for the protection of any employee.
  - Do everything reasonably necessary to protect the life and safety of your employees.

Employer Responsibilities: Safe Workplace

WAC 296-800-110

Rule

WAC 296-800-11015

Prohibit employees from entering, or being in, any workplace that isn't safe

You must

- Prohibit employees from entering, or being in, any workplace that isn't safe.

WAC 296-800-11020

Construct your workplace so it's safe

You must

- Not construct, or cause to be constructed, a workplace that isn't safe.
  - This rule applies to employers, owners, and renters of property used as a place of employment.

WAC 296-800-11025

Prohibit alcohol and narcotics from your workplace

You must

- Prohibit alcohol and narcotics from your workplace, except in industries and businesses that produce, distribute, or sell alcohol and narcotic drugs.
- Prohibit employees under the influence of alcohol or narcotics from the worksite.

Exemption:

Employees who are taking prescription drugs, as directed by a physician or dentist, are exempt from this section, if the employees aren't a danger to themselves or other employees.

Employer Responsibilities: Safe Workplace

WAC 296-800-110

Rule

WAC 296-800-11030

Prohibit employees from using tools and equipment that aren't safe

You must

- Take responsibility for the safe condition of tools and equipment used by employees.

Note:

This applies to all equipment, materials, tools, and machinery whether owned by the employer or under control of another firm or individual.

WAC 296-800-11035

Establish, supervise, and enforce rules that lead to a safe and healthy work environment that are effective in practice

You must

- Establish, supervise, and enforce rules that lead to a safe and healthy work environment that are effective in practice.

Employer Responsibilities: Safe Workplace

WAC 296-800-110

Rule

WAC 296-800-11040

Control chemical agents

You must

- Control chemical agents in a manner that they won't present a hazard to your workers **or**
- Protect workers from the hazard of contact with, or exposure to, chemical agents

Note:

Pesticides are considered to be chemical agents. As required by this rule, you must control them or provide protection to workers from exposure to pesticide hazards. Pesticide manufacturers supply precautionary statements in the informaiton provided with the pesticide that tells you how to protect your workers from these hazards.

WAC 296-800-11045

Protect employees from biological agents

You must

(1) Protect employees from exposure to hazardous concentrations of biological agents that may result from processing, handling or using materials or waste.

Note:

- Potential exposure to biological agents occurs during cleanup, or other tasks, where employees handle:
  - Animals or animal waste
  - Body fluids
  - Biological agents in a medical research lab
  - Mold or mildew
- Check the Center of Disease Control website (www.cdc.gov) to find published guidelines and information on safe handling and protection from specific biological agents (examples: Hantavirus, TB).

-Continued-

WAC 296-800-11045 (Continued)

You must

(2) Warn employees of biohazards

- Use signs, tags, or labels to identify:
  - The actual or potential presence of a biohazard

    and
  - Equipment, containers, rooms, materials, experimental animals, or any combinations of these that contain viable hazardous agents.

Definition

Biohazard means those infectious agents presenting a risk or potential risk of death, injury or illness to employees.

You must

- Make sure the sign, tag, or label includes the biohazard symbol that is designed and proportioned in the illustration that follows.

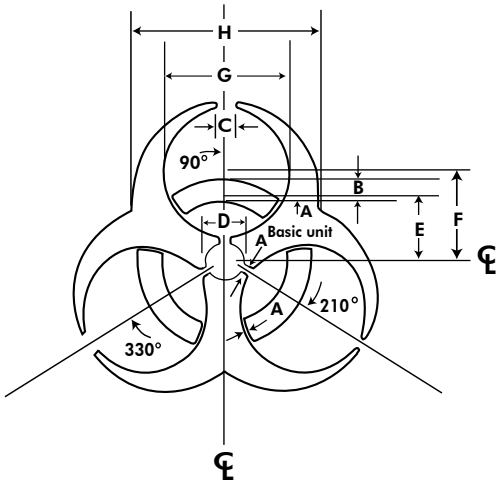

Dimension	A	B	C	D	E	F	G	H
Units	1	3½	4	6	11	15	21	30

Symbol for Biological Hazard

-Continued-

Employer Responsibilities: Safe Workplace

WAC 296-800-110

Rule

WAC 296-800-11045 (Continued)

You must

- Make sure that there is sufficient contrast for the symbol to be clearly defined, if the sign, tag, or label has a background color.

Reference:

Additional requirements for biohazard signs, tags, and labels may apply. See WAC 296-823-14025 and WAC 296-823-18040 of the Bloodborne Pathogens book.

Note:

- It's recommended that the sign, tag or label have a key color of fluorescent orange or orange-red and lettering or symbols in a contrasting color.
- Appropriate wording may be used in association with the symbol to indicate:
  - The nature or identity of the hazard
  - Name of individual responsible for its control
  - Precautionary information

    or
  - Other information.
- This information should not be written on the symbol.

Employee Responsibilities

WAC 296-800-120

Rule

EMPLOYEE'S RESPONSIBILITY:

To play an active role in creating a safe and healthy workplace and comply with all applicable safety and health rules

Note:

Employees may discuss and participate in any WISHA safety and health related practice and may refuse to perform dangerous tasks without fear of discrimination. Discrimination includes: dismissal, demotion, loss of seniority, denial of a promotion, harassment, etc. (see Chapter 296-360 WAC, Discrimination) pursuant to RCW 49.17.160 for a complete description of discrimination and the department's responsibility to protect employees.

WAC 296-800-12005

Employees must

- Study and follow all safe practices that apply to their work.
- Coordinate and cooperate with all other employees in the workplace to try to eliminate on-the-job injuries and illnesses.

Helpful Tool:

Report of a Workplace Hazard

Employees are encouraged to use the Report of a Workplace Hazard form to help carry out the accident prevention program in their workplace. You can find a copy of the form in the Resource Section of this book.

- Apply the principles of accident prevention in their daily work and use proper safety devices and protective equipment as required by their employment or employer.

-Continued-

Employee Responsibilities

WAC 296-800-120

Rule

WAC 296-800-12005 (Continued)

- Take care of all personal protective equipment (PPE) properly.
- Not wear torn or loose clothing while working around machinery.

Note:

Things such as clothing, hair, and jewelry can get caught in machinery and be a hazard on the job.

Employees must

- Report promptly to their supervisor every industrial injury or occupational illness.
- Not remove, displace, damage, or destroy or carry off any safeguard, notice, or warning provided to make the workplace safe.
- Not interfere with the use of any safeguard by anyone in the workplace.
- Not interfere with the use of any work practice designed to protect them from injuries.
- Do everything reasonably necessary to protect the life and safety of employees.

Helpful Tool:

Employees Rights under WISHA

Refer to this Helpful Tool to see a brief description of your WISHA rights as an employee. WISHA protects employees' rights to participate in the creation of a safe and healthy workplace without fear of discharge, retaliation, or discrimination. To learn more about employees' WISHA rights, see WAC 296-360-010 and RCW 49.17.160. You can find a copy of this form in the Resource Section of this book.

Safety Committees & Safety Meetings

WAC 296-800-130

Summary

IMPORTANT:

This rule requires you to have a method of communicating and evaluating safety and health issues brought up by you or your employees in your workplace. Larger employers must establish a safety committee. Smaller employers have the choice of either establishing a safety committee or holding safety meetings with a management representative present.

There is a difference between a safety committee and a safety meeting.

- A safety committee is an organizational structure where members represent a group. This gives everyone a voice but keeps the meeting size to an effective number of participants.
- A safety meeting includes all employees and a management person is there to ensure that issues are addressed. Typically, the safety committee is an effective safety management tool for a larger employer and safety meetings are more effective for a smaller employer.

YOUR RESPONSIBILITY:

To establish a safety committee or hold safety meetings to create and maintain a safe and healthy workplace for all employees

You must

Establish and conduct safety committees
WAC 296-800-13020 ..... Page 130-2

Follow these rules to conduct safety meetings
WAC 296-800-13025 ..... Page 130-4

Rule

WAC 296-800-13020

Establish and conduct safety committees

You must

IF:	THEN:
You employ 11 or more employees on the same shift at the same location	You must establish a safety committee

You must

(1) Establish a safety committee.

- Make sure your committee:
  - Has employee-elected and employer-selected members.
    - The number of employee-elected members must equal or exceed the number of employer-selected members.

Note:

Employees selected by the employees bargaining representative or union qualify as employee-elected.

    - The term of employee-elected members must be a maximum of one year. (There is no limit to the number of terms a representative can serve.)
    - If there is an employee-elected member vacancy, a new member must be elected prior to the next scheduled meeting.
  - Has an elected chairperson.
  - Determines how often, when, and where, the safety committee will meet.

-Continued-

WAC 296-800-13020 (Continued)

Note:

- Meetings should be one hour or less, unless extended by a majority vote of the committee.
- If the committee cannot agree on the frequency of meetings, the department of labor and industries regional safety consultation representative should be consulted for recommendations. (See the resources section of this book for contacts.)

You must

(2) Cover these topics

- Review safety and health inspection reports to help correct safety hazards.
- Evaluate the accident investigations conducted since the last meeting to determine if the cause(s) of the unsafe situation was identified and corrected.
- Evaluate your workplace accident and illness prevention program and discuss recommendations for improvement, if needed.
- Document attendance.
- Write down subjects discussed.

(3) Record meetings.

- Prepare minutes from each safety committee and:
  - Preserve them for one year
  - Make them available for review by safety and health consultation personnel of the Department of Labor and Industries.

Rule

WAC 296-800-13025

Follow these rules to conduct safety meetings

You must

IF:	THEN:
You have 10 or less employees or If you have 11 or more that meet these conditions: • Work on different shifts and 10 or less employees are on each shift or • Work in widely separated locations and 10 or less employees are at each location	You may choose to hold a safety meeting instead of a safety committee

You must

(1) Do the following for safety meetings:

- Make sure your meetings:
  - Are held monthly. You may meet more often to discuss safety issues as they come up.
  - Have at least one management representative.

(2) Cover these topics

- Review safety and health inspection reports to help correct safety hazards.
- Evaluate the accident investigations conducted since the last meeting to determine if the cause(s) of the unsafe situation was identified and corrected.

-Continued-

WAC 296-800-13025 (Continued)

- Evaluate your workplace accident and illness prevention program and discuss recommendations for improvement, if needed.
- Document attendance.
- Write down subjects discussed.

Note:

There are no formal documentation requirements for safety meetings except for writing down who attended and the topics discussed.

Notes

Accident Prevention Program (APP)

WAC 296-800-140

Summary

YOUR RESPONSIBILITY:

To establish, supervise and enforce an accident prevention program (APP) that is effective in practice (You may call this your total safety and health plan.)

You must

Develop a formal, written accident prevention program (APP)
WAC 296-800-14005 ..... Page 140-2

Develop, supervise, implement, and enforce safety and health training programs that are effective in practice
WAC 296-800-14020 ..... Page 140-4

Make sure your accident prevention program (APP) is effective in practice
WAC 296-800-14025 ..... Page 140-5

Accident Prevention Program (APP)

WAC 296-800-140

Rule

WAC 296-800-14005

Develop a formal, written accident prevention program (APP)

You must

- Develop a formal accident prevention program that is outlined in writing. The program must be tailored to the needs of your particular workplace or operation and to the types of hazards involved.

Note:

The term "accident prevention program" refers to your written plan to prevent accidents, illnesses, and injuries on the job. Your accident prevention program may be known as your safety and health plan, injury prevention program, or by some other name.

You must

- Make sure your Accident Prevention Program contains at least the following elements:
  - A safety orientation:
    - A description of your total safety and health program.
    - On-the-job orientation showing employees what they need to know to perform their initial job assignments safely.
    - How and when to report on-the-job injuries including instruction about the location of first-aid facilities in your workplace.
    - How to report unsafe conditions and practices.
    - The use and care of required personal protective equipment (PPE).
    - What to do in an emergency, including how to exit the workplace.
    - Identification of hazardous gases, chemicals, or materials used on-the-job and instruction about the safe use and emergency action to take after accidental exposure.
  - A safety and health committee (WAC 296-800-130)

-Continued-

WAC 296-800-14005 (Continued)

Helpful Tool:

Additional Program Requirements Table

The table will help you determine additional programs, plans, and other related requirements that might be needed beyond your accident prevention program (your total safety and health plan). If you are required to have additional written programs or procedures, they can be included in your accident prevention program or covered in supplemental documents. You can find a copy of this table in the Resource Section of this book.

Accident Prevention Program (APP)

WAC 296-800-140

Rule

WAC 296-800-14020

Develop, supervise, implement, and enforce safety and health training programs that are effective in practice

You must

- Develop, supervise, implement, and enforce training programs to improve the skill, awareness, and competency of all your employees in the field of occupational safety and health.
- Make sure training includes on-the-job instruction to employees prior to their job assignment about hazards such as:
  - Safe use of powered materials-handling equipment such as forklifts, backhoes, etc.
  - Safe use of machine tool operations
  - Use of toxic materials
  - Operation of utility systems

Helpful Tool:

Training Documentation Form

The sample Training Documentation Form can help you verify in writing that each employee who needs training has received and understood it. You can find a copy of this sample form in the Resource Section of this book.

Accident Prevention Program (APP)

WAC 296-800-140

Rule

WAC 296-800-14025

Make sure your accident prevention program (APP) is effective in practice

You must

- Establish, supervise, and enforce your accident prevention program in a manner that is effective in practice.

Helpful Tool:

Report of a Workplace Hazard Form

Your employees are encouraged to use this form to help carry out the Accident Prevention Program in your workplace. You can find a copy of this form in the Resource Section of this book.

Notes

First Aid

WAC 296-800-150

Summary

YOUR RESPONSIBILITY:

Make sure first-aid trained personnel are available to provide quick and effective first aid

You must

Make sure that first-aid trained personnel are available to provide quick and effective first aid
WAC 296-800-15005 ..... Page 150-3

Make sure appropriate first-aid supplies are readily available
WAC 296-800-15020 ..... Page 150-4

Make sure emergency washing facilities are functional and readily accessible
WAC 296-800-15030 ..... Page 150-5

Inspect and activate your emergency washing facilities
WAC 296-800-15035 ..... Page 150-8

Make sure supplemental flushing equipment provides sufficient water
WAC 296-800-15040 ..... Page 150-9

-Continued-

Summary

WAC 296-800-150 (Continued)

Note:

- Employers who require their employees to provide first aid must comply with chapter 296-823 WAC, Occupational exposure to bloodborne pathogens.
- Your workplace may be covered by separate first-aid rules. If you do any of the types of work listed below, you must follow separate, industry specific rules:

Industry	*Chapter (WAC)*
Agricultural	*296-307*
Compressed air	*296-36*
Construction	*296-155*
Fire fighting	*296-305*
Logging	*296-54*
Sawmill	*296-78*
Ship building and repairing	*296-304*

You can get copies of these rules by calling 1-800-4BE SAFE (1-800-423-7233), or by going to http://www.lni.wa.gov

WAC 296-800-15005

Make sure that first-aid trained personnel are available to provide quick and effective first aid

You must:

Comply with the first-aid training requirements of 29 CFR 1910.151(b) which states:

> "In the absence of an infirmary, clinic, or hospital in near proximity to the workplace, which is used for the treatment of all injured employees, a person or persons shall be adequately trained to render first-aid."

Rule

WAC 296-800-15020

Make sure appropriate first-aid supplies are readily available

You must

- Make sure first-aid supplies are readily available.
- Make sure first-aid supplies at your workplace are appropriate to:
  - Your occupational setting.
  - The response time of your emergency medical services.

Note:

First-aid kits from your local retailer or safety supplier should be adequate for most nonindustrial employers.

You must

- Make sure that first-aid supplies are:
  - Easily accessible to all your employees.
  - Stored in containers that protect them from damage, deterioration, or contamination. Containers must be clearly marked, not locked, and may be sealed.
  - Able to be moved to the location of an injured or acutely ill employee.

WAC 296-800-15030

Make sure emergency washing facilities are functional and readily accessible

You must

- Provide an emergency shower:
  - When there is potential for major portions of an employee's body to contact corrosives, strong irritants, or toxic chemicals.
  - That delivers water to cascade over the user's entire body at a minimum rate of 20 gallons (75 liters) per minute for fifteen minutes or more.
- Provide an emergency eyewash:
  - When there is potential for an employee's eyes to be exposed to corrosives, strong irritants, or toxic chemicals.
  - That irrigates and flushes both eyes simultaneously while the user holds their eyes open.
  - With an on-off valve that activates in one second or less and remains on without user assistance until intentionally turned off.
  - That delivers at least 0.4 gallons (1.5 liters) of water per minute for 15 minutes or more.

-Continued-

Rule

WAC 296-800-15030 (Continued)

Note:

Chemicals that require emergency washing faclilites:

- You can determine whether chemicals in your workplace require emergency washing facilities by looking at the material safety data sheet (MSDS) or similar documents. The MSDS contains information about first-aid requirements and emergency flushing of skin or eyes.
- For chemicals developed in the workplace, the following resources provide information about first-aid requirements:
  - NIOSH Pocket Guide to Chemical Hazards
    *DHHS (NIOSH) Publication No. 97-140
    *http://www.cdc.gov/niosh/npg/ggdstart.html
  - Threshold Limit Values for Chemical Substances and Physical Agents American Conference of Governmental Industrial Hygienists (ACGIH)

You must

- Make sure emergency washing facilities:
  - Are located so that it takes no more than ten seconds to reach.
  - Are kept free of obstacles blocking their use.
  - Function correctly.
  - Provide the quality and quantity of water that is satisfactory for emergency washing purposes.

Note:

- If water in emergency washing facilities is allowed to freeze, they won't function correctly. Precautions need to be taken to prevent this from happening.
- The travel distance to an emergency washing facility should be no more than 50 feet (15.25 meters).

-Continued-

WAC 296-800-15030 (Continued)

- For further information on the design, installation, and maintenance of emergency washing facilities, see American National Standards Institute (ANSI) publication Z358.1 - 1998, Emergency Eyewash and Shower Equipment. Emergency washing facilities that are designed to meet ANSI Z358.1 - 1998 also meet the requirements of this standard. The ANSI standard can be obtained from the American National Standards Institute, 1430 Broadway, NewYork, New York 10018.

Reference:

- Training in the location and use of your emergency washing facilities is required under the employer chemical hazard communication rule, WAC 296-800-170, and the accident prevention program rule, WAC 296-800-140.
- All emergency washing facilities using “not fit for drinking” (nonpotable) water must have signs stating the water is “not fit for drinking.” See WAC 296-800-23010.

Rule

WAC 296-800-15035

Inspect and activate your emergency washing facilities

You must

- Make sure all plumbed emergency washing facilities are inspected once a year to make sure they function correctly.

Note:

Inspections should include:

- Examination of the piping
- Make sure that water is available at the apporpriate temperature and quality
- Activation to check that the valves and other hardware work properly
- Checking the water flow rate.

You must

- Make sure plumbed emergency eyewashes and hand-held drench hoses are activated weekly to check the proper functioning of the valves, hardware, and availability of water
- Make sure all self-contained eyewash equipment and personal eyewash units are inspected and maintained according to manufacturer instructions.
  - Inspections to check proper operation must be done once a year
  - Sealed personal eyewashes must be replaced after the manufacturer's expiration date.

Note:

Most manufacturers recommend replacing fluid in open self-contained eyewashes every 6 months. The period for sealed containers is typically 2 years.

WAC 296-800-15040

Make sure supplemental flushing equipment provides sufficient water

Note:

Supplemental flushing equipment can't be used in place of required emergency showers or eyewashes.

You must

- Make sure hand-held drench hoses deliver at least 3.0 gallons (11.4 liters) of water per minute for 15 minutes or more.

Note:

Why use a drench hose? A drench hose is useful when:

- The spill is small and doesn't require an emergency shower
- Used with a shower for local rinsing, particularly on the lower extremities.

You must

- Make sure personal eyewash equipment delivers only clean water or other medically approved eye flushing solutions.

Notes

Personal Protective Equipment (PPE)

WAC 296-800-160

Summary

YOUR RESPONSIBILITY:

To make sure that your employees have, use, and care for the appropriate personal protective equipment (PPE)

PPE is an item or items used to protect the eyes, face, head, body, arms, hands, legs, and feet such as goggles, helmets, head covers, gloves, rubber slickers, disposable coveralls, safety shoes, protective shields, and barriers.

You must

Do a hazard assessment for PPE
WAC 296-800-16005 ..... Page 160-3

Document your hazard assessment for PPE
WAC 296-800-16010 ..... Page 160-4

Select appropriate PPE for your employees
WAC 296-800-16015 ..... Page 160-4

Provide PPE to your employees
WAC 296-800-16020 ..... Page 160-6

Train your employees to use PPE
WAC 296-800-16025 ..... Page 160-7

Retrain employees to use PPE, if necessary
WAC 296-800-16030 ..... Page 160-7

Document PPE training
WAC 296-800-16035 ..... Page 160-8

Require your employees to use necessary PPE on the job
WAC 296-800-16040 ..... Page 160-8

Keep PPE in safe and good condition
WAC 296-800-16045 ..... Page 160-9

—Continued—

Summary

WAC 296-800-160(Continued)

Make sure your employees use appropriate eye and face protection
WAC 296-800-16050 ..... Page 160-10

Make sure your employees use appropriate head protection
WAC 296-800-16055 ..... Page 160-11

Make sure your employees use appropriate foot protection
WAC 296-800-16060 ..... Page 160-12

Make sure your employees use appropriate hand protection
WAC 296-800-16065 ..... Page 160-13

Make sure your employees are protected from drowning
WAC 296-800-16070 ..... Page 160-14

Exemption:

WACs 296-800-16015, 296-800-16025, 296-800-16030, and 296-800-16035 don't apply to electrical protective equipment or respiratory protection. See Chapters 296-24 WAC, Part L and Chapter 296-62 WAC, Part E for rules about these types of protective equipment.

WAC 296-800-16005

Do a hazard assessment for PPE

You must

- Look for and identify hazards or potential hazards in your workplace and determine if PPE is necessary on the job.

Note:

PPE alone shouldn't be relied on to provide protection for your employees. PPE should be used after all other reasonable means of reducing hazards have been carried out. Identifying hazards in your workplace should be built into your regular routine. You should take active steps to get rid of all identified hazards. For example, you can:

- Consider other ways to get hazardous jobs done.
- Reduce hazardous materials or processes.
- Apply engineering controls to reduce or eliminate hazards.

Helpful Tool:

Hazard Assessment Checklist

The sample Hazard Assessment Checklist can help you do a hazard assessment to see if your employees need to use PPE. You will find a copy of this sample checklist in the Resource Section of this book.

Personal Protective Equipment (PPE)

WAC 296-800-160

Rule

WAC 296-800-16010

Document your hazard assessment for PPE

You must

- Verify that a hazard assessment for PPE has been done at your workplace and complete a written certification (paper or electronic format) that includes the:
  - Name of the workplace.
  - Address of the workplace you inspected for hazards.
  - Name of person certifying that a workplace hazard assessment was done.
  - Date(s) the workplace hazard assessment was done.
  - Statement identifying the document as the certification of hazard assessment for PPE for the workplace.

WAC 296-800-16015

Select appropriate PPE for your employees

You must

(1) Select appropriate PPE.

- Select appropriate PPE for your employees if hazards are present, or likely to be present.
- Select PPE for each at-risk employee to use for protection from the hazards identified in your workplace hazard assessment.

(2) Select PPE that properly fits each at-risk employee.

-Continued-

WAC 296-800-16015 (Continued)

Note:

The hazards in your workplace may have special rules that apply to them. For information about PPE for specific workplaces, see these WISHA rule books:

Construction Work	Chapter 296-155 WAC
Electrical Workers	Chapter 296-45 WAC
Fire Fighters	Chapter 296-305 WAC
General Occupational Health Standards	Chapter 296-62 WAC
General Safety and Health Standards	Chapter 296-24 WAC
Logging Operations	Chapter 296-54 WAC
Pulp, Paper, & Paperboard Mills and Converters	Chapter 296-79 WAC
Ship Repairing, Ship Building and Shipbreaking	Chapter 296-304 WAC
Ski Area Facilities and Operations	Chapter 296-59 WAC
Telecommunication	Chapter 296-32 WAC
Textile Industry	Chapter 296-301 WAC

Note:

For help in selecting PPE for your employees, you have several options. You may:

- Visit the OSHA website http://www.osha-slc.gov/SLTC/personalprotectiveequipment/index.html.
- Call 1-800-4BE SAFE (1-800-423-7233) for guidelines for selecting PPE.
- Consult with safety and health professionals knowledgeable in this area. See Resource Section for links to professional organizations.
- Discuss PPE choices with your employees.

Personal Protective Equipment (PPE)

WAC 296-800-160

Rule

WAC 296-800-16020

Provide PPE to your employees

You must

- Provide PPE wherever hazards exist from:
  - Processes or the environment
  - Chemical hazards
  - Radiological hazards

    or
  - Mechanical irritants that could cause injury or impairment to the function of any body part through absorption, inhalation, or physical contact.
- Provide necessary PPE to employees at no cost to the employee if the PPE:
  - Will be used to protect against hazardous materials.
  - Is the type that would not reasonably or normally be worn away from the workplace, such as single use or disposable PPE.

Note:

- Examples of PPE that the employer **must** provide are:
  - Boots or gloves that could become contaminated with hazardous materials in the workplace.
  - Safety glasses, goggles, and nonprescription protective eye wear.
  - Goggles that fit over prescription eye wear.
  - Hard hats.
  - Full body harnesses and lanyards.
  - Single use or disposable PPE such as plastic type gloves used in the food service or medical industries.
- Examples of PPE that the employer may **not** have to provide are:
  - Coats to protect against inclement weather.
  - Leather boots, with or without steel toes, that will not become contaminated on the job.
  - Prescription protective eye wear (except as part of a full face piece or hooded respirator).

WAC 296-800-16025

Train your employees to use PPE

You must

- Communicate your PPE selection decision to each at-risk employee.
- Provide training to each employee who is required to use PPE on the job. Each affected employee must be trained to know at least the following:
  - When PPE is necessary.
  - What PPE is necessary.
  - How to put on, take off, adjust, and wear PPE.
  - Limitations of PPE.
  - Proper care, maintenance, useful life, and disposal of PPE.
- Make sure, before an employee is allowed to perform work requiring the use of PPE, that the employee can:
  - Demonstrate an understanding of the training specified above; **and**
  - Demonstrate the ability to use PPE properly.

WAC 296-800-16030

Retrain employees to use PPE, if necessary

You must

- Retrain an employee when you have reason to believe the understanding, motivation, and skills required to use the PPE hasn't been retained. Circumstances where retraining is required include:
  - Changes in the workplace that make previous training out of date.
  - Changes in the types of PPE to be used make previous training out of date.
  - Work habits or demonstrated knowledge indicate that the employee hasn't retained the necessary understanding, skill, or motivation to use PPE.

Rule

WAC 296-800-16035

Document PPE training

You must

- Document in writing that each employee using PPE has received and understood the required training.
  - This documentation must include:
    - Name of each employee
    - Date(s) of training
    - Subject of the training

Note:

Documentation may be stored on a computer as long as it is available to safety and health personnel from the Department of Labor and Industries.

Helpful Tool:

Training Documentation Form

The sample Training Documentation form can help you verify in writing that each employee who needs to use PPE has received and understood the required training. You will find a copy of this sample form in the Resource Section of this book.

WAC 296-800-16040

Require your employees to use necessary PPE on the job

You must

- Require your employees to use necessary PPE on the job.

WAC 296-800-16045

Keep PPE in safe and good condition

You must

- Make sure all PPE is safe for the work to be performed. It must:
  - Be durable.
  - Fit snugly.
  - Not interfere with the employee's movements.
- Make sure PPE is used and maintained in a clean and reliable condition.
  - Defective equipment **must not** be used.
- Make sure if employees provide their own PPE, that it is adequate for the workplace hazards, and maintained in a clean and reliable condition.

Personal Protective Equipment (PPE)

WAC 296-800-160

Rule

WAC 296-800-16050

Make sure your employees use appropriate eye and face protection

You must

- Make sure that employees exposed to hazards that could injure their eyes and/or face use appropriate protection. Examples of these hazards include:
  - Flying particles.
  - Molten metal.
  - Liquid chemicals.
  - Acids or caustic liquids.
  - Chemical gases or vapors.
  - Any light that could injure the eyes such as lasers, ultraviolet, or infrared light.
  - Objects that puncture.
- Make sure employees exposed to hazards from flying objects have eye protection with side protection, such as safety glasses with clip-on or slide-on side shields.
- Make sure eye protection for employees who wear prescription lenses:
  - Incorporates the prescription into the design of the eye protection;
    or
  - Is large enough to be worn over the prescription lenses without disturbing them.
- Make sure PPE used to protect the eyes and face meet the following specific ANSI (American National Standards Institute) standards. Most commercially available PPE is marked with the specific ANSI requirements.
  - PPE bought before February 20, 1995, must meet ANSI standard Z87.1-1968.
  - PPE bought on or after February 20, 1995, must meet ANSI standard Z87.1-1989.
  - If you use eye or face protection that doesn't meet these ANSI standards, you must show they are equally effective.

-Continued-

WAC 296-800-16050 (Continued)

Note:

ANSI is the American National Standards Institute that publishes nationally recognized safety and health requirements. Their address is:

ANSI (AMERICAN NATIONAL STANDARDS INSTITUTE)
1819 L STREET, NW
WASHINGTON, DC 20036
PHONE: (202) 293-8020
FAX: (202) 293-9287
http://www.ansi.org

WAC 296-800-16055

Make sure your employees use appropriate head protection

You must

(1) Make sure employees wear appropriate protective helmets:

- Where employees are exposed to hazards that could cause a head injury. Examples of this type of hazard include:
  - Flying or propelled objects.
  - Falling objects or materials.
- Where employees are working around or under scaffolds or other overhead structures.
- That helmets meet the following specific ANSI standards (most commercially available PPE is marked with specific ANSI requirements):
  - Protective helmets bought **before** February 20, 1995, must meet ANSI standard Z89.1-1969.
  - Protective helmets bought **after** February 20, 1995, must meet ANSI standard Z89.1-1986.
  - If you use protective helmets that don't meet these ANSI standards, you must show they are equally effective.

-Continued-

Rule

WAC 296-800-16055 (Continued)

(2) Make sure employees working near exposed electrical conductors that could contact their head wear a protective helmet designed (that meet the above ANSI standards) to reduce electrical shock hazard.

- Caps with metal buttons or metal visors must **not** be worn around electrical hazards.

(3) Make sure employees working around machinery or in locations that present a hair-catching or fire hazard wear caps or head coverings that completely cover their hair.

- Employees must wear a hair net that controls all loose ends when:
  - Hair is as long as the radius of pressure rolls with exposed in-running nip points.
  - Hair is twice as long as the circumference of exposed revolving shafts or tools in fixed machines.
- Employees must wear a hair covering of solid material when:
  - The employee is exposed to an ignition source and may run into an area containing class-1 flammable liquids, such as ether, benzene, or combustible atmospheres if their hair is on fire.

WAC 296-800-16060

Make sure your employees use appropriate foot protection

You must

(1) Use appropriate foot protection:

- Where employees are exposed to hazards that could injure their feet. Examples of these hazards are:
  - Falling objects
  - Rolling objects
  - Piercing/cutting injuries
  - Electrical hazards

-Continued-

WAC 296-800-16060 (Continued)

- That meets specific ANSI requirements. (Most commercially available PPE is marked with specific ANSI requirements.)
  - PPE bought before February 20, 1995, must meet ANSI standard Z41.1-1967.
  - PPE bought after February 20, 1995, must meet ANSI standard Z41-1991.
  - If you use foot protection that doesn't meet these ANSI standards, you must show it is equally effective.

(2) Make sure your employees wear calks or other suitable footwear to protect against slipping while they are working on top of logs.

WAC 296-800-16065

Make sure your employees use appropriate hand protection

You must

- Make sure employees exposed to hazards that could injure their hands use appropriate hand protection. Examples of these hazards include:
  - Absorbing harmful substances
  - Severe cuts, lacerations or abrasions
  - Punctures
  - Chemical burns and/or thermal burns
  - Harmful temperature extremes
- Make sure when choosing hand protection, you consider how well the hand protection performs relative to the:
  - Task
  - Conditions present
  - Duration of use
  - Hazards
  - Potential hazards

Rule

WAC 296-800-16070

Make sure your employees are protected from drowning

You must

(1) Provide and make sure your employees wear personal flotation devices (PFD).

- When they work in areas where the danger of drowning exists, such as:
  - On the water
  - Over the water
  - Alongside the water

Note:

Employees aren't exposed to the danger of drowning when:

- Employees are working behind standard height and strength guardrails.
- Employees are working inside operating cabs or stations that eliminate the possibility of accidentally falling into the water.
- Employees are wearing an approved safety belt with a lifeline attached that prevents the possibility of accidentally falling into the water.

-Continued-

WAC 296-800-16070 (1)(Continued)

You must

- Provide your employees with PFDs approved by the United States Coast Guard for use on commercial or merchant vessels. The following are appropriate or allowable United States Coast Guard-approved PFDs:

Type of PFD	General Description
Type I	Off-Shore Life Jacket - effective for all waters or where rescue may be delayed.
Type II	Near-Shore Buoyant Vest - intended for calm, inland water or where there is a good chance of quick rescue.
Type III	Flotation aid - good for calm, inland water, or where there is a good chance of rescue.
Type V	Flotation aids such as boardsailing vests, deck suits, work vests and inflatable PFDs marked for commercial use.

Note:

- Commercially available PFDs are marked or imprinted with the type of PFD.
- Type IV PFDs are throwable devices. They are used to aid persons who have fallen into the water.

You must

- Inspect PFDs before and after each use for defects and make sure that defective PFDs aren't used.

-Continued-

Rule

WAC 296-800-16070 (Continued)

You must

(2) Provide approved life rings with an attached line on all docks, walkways, and fixed installations on, or adjacent to, water more than 5 feet deep.

- Life rings must:
  - Be United States Coast Guard approved 30 inch size.
  - Have attached lines that are at least 90 feet in length.
  - Have attached lines at least 1/4 inch in diameter.
  - Have attached lines with a minimum breaking strength of 500 pounds.
  - Be spaced no more than 200 feet apart.
  - Be kept in easily visible and readily accessible locations.
- Life rings and attached lines must:
  - Be maintained to retain at least 75% of their designed buoyancy and strength.
  - Be provided in the immediate vicinity when employees are assigned work at other casual locations where the risk of drowning exists.
- Work assigned over water where the vertical drop from an accidental fall would be more than 50 feet, must be subject to specific procedures as approved by the Department.

Employer Chemical Hazard Communication

WAC 296-800-170

Summary

IMPORTANT:

Thousands of chemicals can be found in today's workplaces. These chemicals may have the capacity to cause health problems, from minor skin irritations to serious injuries or diseases like cancer. You should review the type of chemicals you use and consider using less hazardous chemicals (such as less toxic and nonflammable chemicals).

The Employer Chemical Hazard Communication rule was developed to make sure employers and employees are informed about chemical hazards in the workplace.

This rule applies to:

- Employers engaged in businesses where chemicals are used, distributed, or produced for use or distribution.
- Contractors or subcontractors that work for employers engaged in businesses where chemicals are used, distributed, or produced for use or distribution.

Exemptions:

- Certain products, chemicals, or items are exempt from this rule. Below is a summarized list of these exemptions. See WAC 296-800-17055 at the end of this rule to get complete information about these exemptions:
  - Any hazardous waste or substance
  - Tobacco or tobacco products
  - Wood or wood products that are not chemically treated and won't be processed, for example, by sawing and sanding
  - Food or alcoholic beverages
  - Some drugs, such as retail or prescription medications
  - Retail cosmetics
  - Ionizing and nonionizing radiation
  - Biological hazards
  - Any consumer product or hazardous substance when workplace exposure is the same as that of a consumer

-Continued-

Employer Chemical Hazard Communication

WAC 296-800-170

Summary

WAC 296-800-170 (Continued)

Exemptions:

- Retail products used in offices in the same manner and frequency used by consumers, can be termed “consumer products”, and include things such as: correction fluid, glass cleaner, and dishwashing liquid.

  Example: If you use a household cleaner in your workplace in the same manner and frequency that a consumer would use it when cleaning their house, your exposure should be the same as the consumer’s, and you are exempt. A janitor using a household cleaner, such as bleach, throughout the day, is not considered to be a consumer, and isn't exempt.
- Manufactured items that remain intact are exempt from this rule.
- Manufactured items that are fluids or in the form of particles aren't exempt from this rule.

  The following are examples:

Item	Covered by this rule	Not covered by this rule
Brick	sawed or cut in half	used whole or intact
Pipe	cut by a torch	bent with a tube bender
Nylon rope	burning the ends	tying a knot

Reference:

- If you produce, import, distribute and/or repackage chemicals, or choose not to rely on labels or material safety data sheets provided by the manufacturer or importer, you must comply with chemical hazard communication for manufacturers, importers and distributers, WAC 296-62-054.
- You may withhold trade secret information under certain circumstances. See Trade Secrets, WAC 296-62-053, to find out what information may be withheld as a trade secret and what information must be released.

Employer Chemical Hazard Communication

WAC 296-800-170

Summary

YOUR RESPONSIBILITY:

To inform and train your employees about the hazards of chemicals they may be exposed to during normal working conditions, or in foreseeable emergencies by:

- Making a list of the hazardous chemicals present in your workplace.
- Preparing a written Chemical Hazard Communication Program for your workplace.
- Informing your employees about this rule and your program.
- Providing training to your employees about working in the presence of hazardous chemicals.
- Getting and keeping the Material Safety Data Sheets (MSDSs) for the hazardous chemicals.
- Making sure that labels on containers of hazardous chemicals are in place and easy to read.

You must

Develop, implement, maintain, and make available a written Chemical Hazard Communication Program
WAC 296-800-17005 ..... Page 170-5

Include multiemployer workplaces in your program if necessary
WAC 296-800-17007 ..... Page 170-6

Identify and list all the hazardous chemicals present in your workplace
WAC 296-800-17010 ..... Page 170-8

Obtain and maintain Material Safety Data Sheets (MSDS) for each hazardous chemical used
WAC 296-800-17015 ..... Page 170-9

Make sure that Material Safety Data Sheets (MSDS) are readily accessible to your employees and NIOSH
WAC 296-800-17020 ..... Page 170-12

-Continued-

Employer Chemical Hazard Communication

WAC 296-800-170

Summary

WAC 296-800-170 (Continued)

Label containers holding hazardous chemicals
WAC 296-800-17025 ..... Page 170-13

Inform and train your employees about hazardous chemicals in your workplace
WAC 296-800-17030 ..... Page 170-17

Follow these rules for laboratories using hazardous chemicals
WAC 296-800-17035 ..... Page 170-20

Follow these rules for handling chemicals in factory-sealed containers
WAC 296-800-17040 ..... Page 170-21

The Department must:

Translate certain chemical hazard communication documents upon request
WAC 296-800-17045 ..... Page 170-22

Attempt to obtain a Material Safety Data Sheet (MSDS) upon request
WAC 296-800-17050 ..... Page 170-22

Exemption:

Items or chemicals exempt from the rule, and exemptions from labeling
WAC 296-800-17055 ..... Page 170-23

Employer Chemical Hazard Communication

WAC 296-800-170

Rule

WAC 296-800-17005

Develop, implement, maintain, and make available a written Chemical Hazard Communication Program

You must

- Develop, implement, maintain, and make available a written Chemical Hazard Communication Program specific to your workplace. The Chemical Hazard Communication Program must, at a minimum, include:
  - A list of hazardous chemicals known to be present in your workplace.
  - Procedures for making sure all containers are properly labeled.
  - A description of how you are going to obtain and maintain your Material Safety Data Sheets (MSDSs).
  - A description of how you are going to train and inform your employees about hazardous chemicals in their workplace.
  - A description of how you are going to inform your employees about:
    - Chemical hazards used during nonroutine tasks.
    - The hazards associated with chemicals contained in unlabeled pipes in employee work areas.

Helpful Tool:

Sample Hazardous Chemical Communication Program

This optional tool can help you develop a Chemical Hazard Communication Program. You can find a sample copy of this program in the Resource Section of this book.

-Continued-

Employer Chemical Hazard Communication

WAC 296-800-170

Rule

WAC 296-800-17005 (Continued)

You must

- Make your Chemical Hazard Communication Program available to your employees

Note:

- You must make the written Chemical Hazard Communication Program available, upon request, to employees, their designated representatives, the Department and NIOSH, in accordance with the requirements of Access to Records, WAC 296-62-052.
- Where employees must travel between workplaces during a workshift, that is, if their work is carried out at more than one geographical location, the written Chemical Hazard Communication Program may be kept at the primary workplace facility.

WAC 296-800-17007

Include multiemployer workplaces in your program if necessary

IMPORTANT:

- Sharing chemical hazard information at multiemployer workplaces is required for the success of your hazard communication program and the success of other employers'programs.
- This section applies to a site where you or your employees work if:
  - Your employees may be exposed to hazardous chemicals used by another employer;

    OR
  - Another employer's employees may be exposed to hazardous chemicals you or your employees use.

    Examples include employees of construction companies, cleaning services, or maintenance contractors visiting or working on-site.

-Continued-

WAC 296-800-17007 (Continued)

You must

- Include, in your written Chemical Hazard Communication Program, the methods you will use to share the following hazard information with other employers when their employees share a workplace with you and are potentially exposed to chemicals you produce, use, or store:
  - How you will provide other employers with a copy of the relevant material safety data sheets (MSDSs), or provide access to the MSDSs in a specified location.
  - How you will inform the other employees of any precautionary measures needed to protect employees during normal operating conditions and in forseeable emergencies.
  - A description of how you will inform other employers of the labeling system you use.

Note:

You may rely on another employer's Chemical Hazard Communication Program to share the information required if the program meets the requirements of this rule.

Employer Chemical Hazard Communication

WAC 296-800-170

Rule

WAC 296-800-17010

Identify and list all the hazardous chemicals present in your workplace

You must

- Identify all hazardous chemicals at your workplace.
  - This includes any chemical that is known to be present in your workplace in such a way that employees may be exposed to it under normal conditions of use or in a foreseeable emergency.
- Create a list of these chemicals using the chemical or common name on the Material Safety Data Sheet (MSDS). This list:
  - Must be compiled for the workplace as a whole, or for individual work areas.
  - Is necessary to make sure that all hazardous chemicals are identified and that MSDS, and labeling rules are met.
  - Must be current.

Note:

- The following are some ways to determine whether a product is hazardous:
  - Look for words on the label, such as ‰4"¤›apm:Š˜‰S"mVœŠ ‰="mVFŠ
  - Look for words or “hazard coding” that indicate that the chemical is flammable, an irritant, corrosive, carcinogenic, etc. “Hazard coding” refers to words, numbers, or colors that tell you a chemical is dangerous.
  - Check the product’s MSDS for hazard information.
- Examples of hazardous chemicals are: Acids, adhesives, caustics, fuels, paints, varnishes, shellacs and pesticides. Too many other classes of hazardous chemicals exist to list them all here. If you have any questions about a chemical you have at your workplace, contact your local L&I office (see the Resource Section of this book).

Employer Chemical Hazard Communication

WAC 296-800-170

Rule

WAC 296-800-17015

Obtain and maintain Material Safety Data Sheets (MSDSs) for each hazardous chemical used

Note:

MSDSs are a type of employee exposure record. Therefore, you must comply with the Material Safety Data Sheets (MSDSs) as Exposure Records, WAC 296-800-180, located in this book.

You must

- Obtain a MSDS for each hazardous chemical used as soon as possible, if the MSDS isn't provided with the shipment of a hazardous chemical, from the chemical manufacturer or importer.

Note:

- To obtain a MSDS, you may try calling the manufacturer or checking their website.
- If you have a commercial account with a retailer or wholesaler, you have the right to request and receive a MSDS about hazardous chemicals you purchase.
- If a chemical is purchased from a retailer with no commercial accounts, you have the right to request and receive the manufacturer's name and address so that you can contact them and request a MSDS for the chemical.
- Whoever prepares the MSDS is required to mark all blocks on the form, even if there is no relevant information for that section.

-Continued-

Employer Chemical Hazard Communication

WAC 296-800-170

Rule

WAC 296-800-17015 (Continued)

Note:

- If you have problems getting a MSDS within 30 calendar days after making a written request to the chemical manufacturer, importer, or distributor, you can get help from WISHA. You may contact your local regional office for assistance or make a written request for assistance to the:

  DEPARTMENT OF LABOR AND INDUSTRIES
  RIGHT-TO-KNOW PROGRAM
  P.O. BOX 44610
  OLYMPIA, WASHINGTON 98504-4610

  Include in your request:

  – A copy of the purchaser's written request to the chemical manufacturer, importer, or distributor.
  – The name of the product suspected of containing a hazardous chemical.
  – The identification number of the product, if available.
  – A copy of the product label, if available.
  – The name and address of the chemical manufacturer, importer, or distributor from whom the product was obtained.

Helpful Tool:

Sample Letter for Requesting MSDS

You can use the sample letter to request MSDSs. You can find a copy of this letter in the Resource Section of this book.

Link:

A list of the addresses and phone numbers of the regional offices of the Department of Labor and Industries can be found by visting the L&I website at http://www.lni.wa.gov/wisha or by calling 1-800-4BESAFE (1-800-423-7233).

-Continued-

WAC 296-800-17015 (Continued)

You must

- Maintain a MSDS for each hazardous chemical:
  - Keep copies of the required MSDSs for each hazardous chemical present in your workplace.
  - Each MSDS must be in English. You may also keep copies in other languages.

Reference:

- See material safety data sheets and label preparation, chapter 296-839 WAC, if you choose to create your own MSDS or label.

Employer Chemical Hazard Communication

WAC 296-800-170

Rule

WAC 296-800-17020

Make sure Material Safety Data Sheets (MSDSs) are readily accessible to your employees and NIOSH

You must

- Make sure that MSDSs are readily accessible, easily obtained without delay during each work shift by employees when they are in their work area(s).
- Make sure that employees, who must travel between workplaces during a work shift, such as when their work is carried out at more than one geographical location, can immediately obtain the required MSDS informaiton in an emergency. (MSDSs may be kept at a central location at the primary workplace facility and accessed by means such as voice communication or laptop computer.)

Note:

- Electronic access (such as computer or fax), microfiche, and other alternatives to maintaining paper copies of the MSDSs are permitted as long as they don't create barriers to immediate employee access in each workplace.
- Barriers to immediate access of electronic MSDSs may include:
  - Power outages
  - Equipment failure
  - System delays
  - Deficient user knowledge to operate equipment
  - Location of equipment outside the work area

  Solutions to eliminating these and other possible barriers to access may require the availability of back-up systems, employee training, and providing access equipment in the work areas.

You must

- Make MSDSs readily available, when requested, to representatives of the National Institute for Occupational Safety and Health (NIOSH).

Employer Chemical Hazard Communication

WAC 296-800-170

Rule

WAC 296-800-17025

Label containers holding hazardous chemicals

Exemptions:

The following is a summary of items that are exempt from this rule:

- Pesticides, when labeled as required by the Environmental Protection Agency (EPA).
- Food, food additives, color additives, drugs, cosmetics, or medical/ veterinary devices or products.
- Alcoholic beverages not intended for industrial use.
- Consumer products labeled as required by the Consumer Product Safety Commission.
- Agriculture or vegetable seeds treated and labeled as required by the Federal Seed Act.

For complete information about each of these, see WAC 296-800-17055.

Note:

You aren't required to label portable containers into which hazardous chemicals are transferred from labeled containers, if the chemical is used and controlled by the same employee who performed the transfer within the same shift.

Helpful Tool:

Sample Labels for Hazardous Chemical Containers

You can find sample hazard chemical labels in the Resource Section of this book.

-Continued-

Employer Chemical Hazard Communication

WAC 296-800-170

Rule

WAC 296-800-17025 (Continued)

You must

- Make sure that each container of hazardous chemicals in the workplace is labeled, tagged, or marked with the following information:
  - The identity of the hazardous chemical(s) using either the chemical or common name.
  - Appropriate hazard warnings which give general information about the relevant health and physical hazards of the chemicals. This includes health effects information, such as information about organs most likely to be affected by the chemicals.
  - For individual stationary process containers, you may use alternate labeling methods such as:
    - Signs
    - Placards
    - Process sheets
    - Batch tickets
    - Operating procedures
    - Other such written materials, as long as the alternate method identifies the containers and conveys the required label information.

-Continued-

WAC 296-800-17025 (Continued)

Note:

- You don't need to put on new labels if existing labels already provide the required information.
- You aren't required to list each component in a hazardous mixture on the label. If a mixture is referred to on an MSDS by a product name, then the product name should be used as the identifier.
- You may use words, pictures, symbols, or any combination of these, to communicate the hazards of the chemical.

Sample Container Labels

- Be sure to train your employees so they can demonstrate a knowledge of the labeling system you use.
- Some alternative labeling systems don't communicate target organ information, so the employee will have to rely on training provided by the employer to obtain this information.

-Continued-

Employer Chemical Hazard Communication

WAC 296-800-170

Rule

WAC 296-800-17025 (Continued)

You must

- Not remove or deface existing labels on incoming containers of hazardous chemicals unless the container is immediately labeled with the required information.

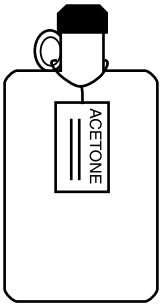

This is an example of a labeled container. You may use a laminated or coated label, affixed to the container with a wire, to avoid deterioration of labels due to a solvent, such as acetone.

You must

- Make sure that labels or other forms of warning are legible, in English, and prominently displayed on the container, or readily available in the work area throughout each work shift.

Note:

Employers with non-English speaking employees may use other languages in the warning information in addition to the English language.

- Make sure if the hazardous chemical is regulated by WISHA or OSHA in a substance-specific health rule, that the labels or other warnings are used according to those rules.

Employer Chemical Hazard Communication

WAC 296-800-170

Rule

WAC 296-800-17030

Inform and train your employees about hazardous chemicals in your workplace

You must

- Provide employees with effective information on hazardous chemicals in their work area at the time of their initial job assignment. Whenever a new physical or health hazard related to chemical exposure is introduced into their employees' work areas, information must be provided.
  - Inform employees of:
    - The requirements of this rule.
    - Any operations in their work area where hazardous chemicals are present.
    - The location and availability of your written Chemical Hazard Communication Program, including the list(s) of hazardous chemicals and Material Safety Data Sheets (MSDSs) required by this rule.
- Provide employees with effective training about hazardous chemicals in their work area at the time of their initial job assignment. Whenever a new physical or health hazard related to chemical exposure is introduced, the employees must be trained.
- Make sure employee training includes:
  - Methods and observations that may be used to detect the presence or release of a hazardous chemical in the work area.

    Examples of these methods and observations may include:
    - Monitoring conducted by you.
    - Continuous monitoring devices.
    - Visual appearance or odor of hazardous chemicals when being released.
  - Physical and health hazards of the chemicals in the work area, including the likely physical symptoms or effects of overexposure.

-Continued-

Employer Chemical Hazard Communication

WAC 296-800-170

Rule

WAC 296-800-17030 (Continued)

- Steps employees can take to protect themselves from the chemical hazards in your workplace, including specific procedures implemented by you to protect employees from exposure to hazardous chemicals. Specific procedures may include:
  - Appropriate work practices
  - Engineering controls
  - Emergency procedures
  - Personal protective equipment to be used
- Details of the chemical hazard communication program developed by you, including an explanation of the labeling system and the MSDS, and how employees can obtain and use the appropriate hazard information.

- Tailor information and training to the types of hazards to which employees will be exposed. The information and training may be designed to cover categories of hazards, such as flammability or cancer-causing potential, or it may address specific chemicals. Chemical-specific information must always be available through labels and MSDSs.
- Make reasonable efforts to post notices in your employees' native languages (as provided by the department) if those employees have trouble communicating in English.

Note:

- Interactive computer-based training or training videos can be used provided they are effective.
- Your MSDSs may not have WISHA permissible exposure limits (PELs) listed. In some cases, WISHA PELs are stricter than the OSHA PELs and other exposure limits listed on the MSDSs you receive. If this is the case, you must refer to the WISHA PEL table, WAC 296-62-075, for the appropriate exposure limits to be covered during training.

-Continued-

WAC 296-800-17030 (Continued)

Helpful Tool:

Training Documentation Form

The Training Documentation Form can help you document employees' hazardous chemical communication training. You can find a sample copy of this form in the Resource Section of this book.

Employer Chemical Hazard Communication

WAC 296-800-170

Rule

WAC 296-800-17035

Follow these rules for laboratories using hazardous chemicals

Note:

- Laboratories are required to have a written Chemical hygiene plan under Chapter 296-828 WAC, if applicable. They are not required to have a written Chemical Hazard Communication Program.
- You may combine your Accident Prevention Program and Chemical Hazard Communication Program to assist you in developing a chemical hygiene plan for your laboratory.

You must

(1) Make sure that labels on incoming containers of hazardous chemicals are in place and readable.

(2) Maintain Material Safety Data Sheets (MSDSs) received with incoming shipments of hazardous chemicals and make them readily accessible to laboratory employees when they are in their work areas.

(3) Provide laboratory employees with information and training as described in: "Inform and train your employees about hazardous chemicals in your workplace," WAC 296-800-17030. You don't have to cover the location and the availability of the Hazard Communication Program.

Note:

Laboratory employers that ship hazardous chemicals are considered to be either chemical manufacturers or distributors. When laboratory employers ship hazardous chemicals they must comply with the rule, "hazard communication standards for chemical manufacturers, importers and distributors," WAC 296-62-054.

Employer Chemical Hazard Communication

WAC 296-800-170

Rule

WAC 296-800-17040

Follow these rules for handling chemicals in factory-sealed containers

This applies to situations where employees only handle chemicals in factory-sealed containers that aren't opened under normal use (such as those found in marine cargo handling, trucking, warehousing, or retail sales).

You must

(1) Make sure that labels on incoming containers of hazardous chemicals are in place and readable.

(2) Keep or obtain Material Safety Data Sheets (MSDSs).

- Keep any MSDSs that are received with incoming shipments of the sealed containers of hazardous chemicals.
- If a factory-sealed container of hazardous chemicals comes without a MSDS, obtain one as soon as possible, if an employee requests it.

(3) Make sure that the MSDSs are readily accessible during each work shift to employees when they are in their work area(s).

(4) Inform and train your employees about hazardous chemicals in your workplace, to protect them in case of a hazardous chemical spill or leak from a factory-sealed container. You don't have to cover the location and availability of the written Chemical Hazard Communication Program.

Employer Chemical Hazard Communication

WAC 296-800-170

Rule

WAC 296-800-17045

Translate certain chemical hazard communication documents upon request

The Department must

- Upon receipt of a written or verbal request, prepare and make available (within available resources) to employers or the public, a translation into Cambodian, Chinese, Korean, Spanish, or Vietnamese of any of the following:
  - An employer's written Chemical Hazard Communication Program.
  - A Material Safety Data Sheet;
    or
  - Written materials prepared by the Department to inform employees of their rights described in this rule, regarding chemical hazard communication.

Note:

Written requests for translations should be directed to:

DEPARTMENT OF LABOR AND INDUSTRIES
RIGHT-TO-KNOW PROGRAM
P.O. BOX 44610
OLYMPIA, WASHINGTON 98504-4610

WAC 296-800-17050

Attempt to obtain a Material Safety Data Sheet (MSDS) upon request

The Department must

- Upon receipt of an employer's written request for a Material Safety Data Sheet, attempt to obtain the MSDS from the chemical manufacturer, importer, or distributor. When the department receives the MSDS, the department must forward a copy of it to the purchaser at no cost. Small business employers will be given priority for this service.

WAC 296-800-17055

Items or chemicals exempt from the rule, and exemptions from labeling

- Listed below are the full descriptions of the items or chemicals that are exempt, or not covered, by this rule:
  - Any consumer product or hazardous substance, defined in the Consumer Product Safety Act (15 U.S.C. 2051 et seq.) and Federal Hazardous Substance Act (15 U.S.C. 1261 et seq.) respectively, where you can show that it is used in the workplace for the purpose intended by the chemical manufacturer or importer of the product, and the use results in a duration and frequency of exposure that isn't greater than the range of exposures that could reasonably be experienced by consumers when used for the purpose intended.
  - Any hazardous waste defined by the Hazardous Waste Management Act chapter 70.105 RCW, when subject to regulations issued under that act by the Department of Ecology that describes specific safety, labeling, personnel training, and other rules for the accumulation, handling and management of hazardous waste.
  - Any hazardous waste defined by the Solid Waste Disposal Act, as amended by the Resource Conservation and Recovery Act of 1976, as amended (42 U.S.C. 6901 et seq.), when subject to regulations issued under that act by the Environmental Protection Agency.
  - Any hazardous substance defined by the Comprehensive Environmental Response, Compensation and Liability Act (CERCLA) (42 U.S.C. 9601 et seq.), when the hazardous substance is the focus of remedial or removal action being conducted under CERCLA in accordance with Environmental Protection Agency regulations.
  - Tobacco or tobacco products.

-Continued-

Employer Chemical Hazard Communication

WAC 296-800-170

Rule

WAC 296-800-17055 (Continued)

- Wood or wood products, including lumber that won't be processed, where the chemical manufacturer or importer can establish that the only hazard they pose to the employees is the potential for flammability or combustibility. Wood or wood products that have been treated with hazardous chemicals covered by this rule, and wood that may be subsequently sawed or cut, generating dust, aren't exempted.
- Articles, meaning manufactured items other than a fluid or particle that:
  - Are formed to a specific shape or design during manufacture;
  - Have end use function(s) dependent in whole or in part upon their shape or design during end use;

    AND
  - Under normal conditions of use, don't release more than very small quantities, for example, minute or trace amounts of a hazardous chemical such as, emissions from a marking pen or a newly varnished wood chair, and don't pose a physical hazard or health risk to employees.
- Food or alcoholic beverages that are sold, used, or prepared in a retail establishment such as a grocery store, restaurant, or drinking place, and foods intended for personal consumption by employees while in the workplace.
- Any drug, defined in the Federal Food, Drug, and Cosmetic Act (21 U.S.C. 301 et seq.), when it is in solid, final form for direct administration to the patient (for example, tablets or pills); drugs that are packaged by the chemical manufacturer for sale to consumers in a retail establishment (for example, over-the-counter drugs); and drugs intended for personal consumption by employees while in the workplace (for example, first-aid supplies). Aerosolized or cytotoxic drugs administered by a health care worker aren't excluded.

-Continued-

WAC 296-800-17055 (Continued)

- Cosmetics packaged for sale to consumers in a retail establishment, and cosmetics intended for personal consumption by employees while in the workplace.
- Ionizing and nonionizing radiation.
- Biological hazards.

- This rule doesn't require labeling of the following chemicals:
  - Any pesticide defined in the Federal Insecticide, Fungicide, and Rodenticide Act (7 U.S.C. 136 et seq.), when subject to the labeling requirements of that act and labeling regulations issued under that act by the Environmental Protection Agency.
  - Any chemical substance or mixture defined in the Toxic Substance Control Act (15 U.S.C. 2601 et seq.), when subject to the labeling requirements of that act, and labeling requirements issued under that act by the Environmental Protection Agency.
  - Any food, food additive, color additive, drug, cosmetic, or medical/veterinary device or product, including materials intended for use as ingredients in such products (for example, flavors and fragrances), are defined in the Federal Food, Drug, and Cosmetic Act (21 U.S.C. 301 et seq.) or the Virus-Serum Toxin Act of 1913 (21 U.S.C. 151 et seq.) and regulations issued under those acts, when they are subject to the labeling requirements under those acts by either the Food and Drug Administration or the Department of Agriculture.
  - Any distilled spirits (beverage alcohols), wine, or malt beverage intended for nonindustrial use, defined in the Federal Alcohol Administration Act (27 U.S.C. 201 et seq.) and regulations issued under that act, when subject to the labeling requirements of that act and labeling regulations issued under that act by the Bureau of Alcohol, Tobacco, and Firearms.

-Continued-

Employer Chemical Hazard Communication

WAC 296-800-170

Rule

WAC 296-800-17055 (Continued)

- Any consumer product or hazardous substance defined in the Consumer Product Safety Act (15 U.S.C. 2051 et seq.) and Federal Hazardous Substances Act (15 U.S.C. 1261 et seq.) respectively, when subject to a consumer product safety rule or labeling requirement of those acts, or regulations issued under those acts by the Consumer Product Safety Commission.
- Agricultural or vegetable seed treated with pesticides and labeled in accordance with the Federal Seed Act (7 U.S.C. 1551 et seq.) and the labeling requirements issued under that act by the Department of Agriculture.

Material Safety Data Sheets (MSDSs) as Exposure Records

WAC 296-800-180

Summary

Important:

Exposure records contain information about employees' exposure to toxic substances or harmful physical agents. Material Safety Data Sheets (MSDSs) are one type of exposure record. The preservation of and access to exposure records is necessary to improve detection, treatment, and prevention of occupational diseases.

This rule supplements the chemical hazard communication rule by extending access to MSDSs, or their alternative, after employment and after the hazardous chemical is no longer used in the workplace.

YOUR RESPONSIBILITY:

To preserve and provide access to Material Safety Data Sheets (MSDSs) or their alternative as exposure records

You must

Preserve exposure records for at least 30 years
WAC 296-800-18005 ..... Page 180-3

Inform current employees of exposure records
WAC 296-800-18010 ..... Page 180-4

Provide access to exposure records
WAC 296-800-18015 ..... Page 180-5

Transfer records when ceasing to do business
WAC 296-800-18020 ..... Page 180-7

Material Safety Data Sheets (MSDSs) as Exposure Records

WAC 296-800-180

Summary

Note:

- Access to records, WAC 296-62-052, requires the preservation and access to other exposure records including records such as workplace monitoring data and biological monitoring results and medical records. If you keep these other types of employee exposure records or employee medical records, you must comply with these additional requirements.
- This rule applies to every employer who maintains, makes, contracts for, or has access to MSDSs for chemicals used in their workplace.
- The specific identity of a toxic substance may be withheld from a disclosable record if it is a verifiable trade secret. For trade secret requirements see WAC 296-62-053.

Material Safety Data Sheets (MSDSs) as Exposure Records

Rule

WAC 296-800-18005

Preserve exposure records for at least 30 years

You must

- Keep Material Safety Data Sheets (MSDSs) and analyses using MSDSs for at least 30 years, including current, former, and future employers receiving transferred records. Preserve MSDSs in any form, as long as the information isn't altered and is retrievable. You may keep alternative records instead of MSDSs concerning the identity of a substance. The alternative record must also be kept for 30 years and contain the following information:
  - Some record of the identity (chemical name, if known) of a substance or agent
  - Where the substance or agent was used
  - When the substance or agent was used

Note:

Keeping alternative records may be less work than you think. When developing your hazard communication program's list of hazardous chemicals (WAC 296-800-17010), add the "where used" and "when used" information required by this rule.

Material Safety Data Sheets (MSDSs) as Exposure Records

WAC 296-800-180

Rule

WAC 296-800-18010

Inform current employees of exposure records

You must

- Inform current employees who are, or will be exposed to a toxic chemical of:

Note:

A chemical is toxic if:

- The latest printed edition of the National Institute for Occupational Safety and Health (NIOSH) Registry of Toxic Effects of Chemical Substances (RTECS) lists the substance. This may be obtained on-line, CD-ROM, or on a computer tape.
- Testing by or known to the employer has shown positive evidence that the substance is an acute or chronic health hazard.
- A material safety data sheet (MSDS) kept by or known to the employer shows the material may be a hazard to human health.

  - The existence, location, and availability of MSDSs or alternative records, and any other records covered by this rule.
  - The person responsible for maintaining and providing access to records.
  - Exposure records when the employee first enters into employment and then once a year thereafter.
  - Existence and their rights of access to these records.

Note:

Informing employees of the availability of these records may be accomplished by posting, group discussion or by individual notifications.

You must

- Keep a copy of this rule and make copies available upon request to employees.
- Distribute to employees any informational materials about this rule that are made available to the employer by the department.

Rule

WAC 296-800-18015

Provide access to exposure records

You must

- Provide access, whenever requested by an employee or their designated representative, to a relevant exposure record:
  - In a reasonable time, place, and manner.
  - Within 15 working days. If the employer can't meet this requirement, they must inform the requesting party of the reason for the delay and the earliest date the record will be made available.

Note:

- Employee means any current, former or transfered worker.
- A relevant exposure record is an MSDS or its alternative; or analysis using MSDSs or their alternative.

You must

- Make sure Labor and Industries has prompt access to any exposure records and related analysis. This must be done without violation of any rights under the Constitution or the Washington Industrial Safety and Health Act that the employer chooses to exercise.

Note:

Nothing in this rule is meant to prevent employees and collective bargaining agents from getting access to information beyond that is required by this rule.

-Continued-

Material Safety Data Sheets (MSDSs) as Exposure Records

WAC 296-800-180

Rule

WAC 296-800-18015 (Continued)

You must

- Make sure that whenever an employee or designated representative requests an initial copy of an exposure record, related analysis or new information added to the record:
  - A copy of the record is provided without cost to the employee or their representative.

    or
  - The facilities are made available for copying without cost to the employee or their representative.

    or
  - The record is loaned to the employee or their representative for a reasonable time to enable a copy to be made.

Note:

Whenever a record has been previously provided without cost to an employee or designated representative, and they request additional copies, the employer may charge reasonable, nondiscriminatory administrative costs (e.g., search and copying expenses, but no overhead expenses).

Material Safety Data Sheets (MSDSs) as Exposure Records

WAC 296-800-180

Rule

WAC 296-800-18020

Transfer records when ceasing to do business

You must

- Transfer all Material Safety Data Sheets (MSDSs) as exposure records to the successor employer, who must do the following to these records:
  - Receive
  - Preserve
  - Keep unchanged
- If there is no successor to receive and preserve the employee exposure records:
  - Notify affected current employees of their rights of access to records at least 3 months prior to the cessation of the employer's business.

    and
  - Transfer the records to the Department, if required by a specific WISHA safety and health rule.

Notes

Safety Bulletin Board

WAC 296-800-190

Rule

YOUR RESPONSIBILITY:

To provide a safety bulletin board

WAC 296-800-19005

Provide a safety bulletin board in your workplace

You must

- Install and maintain a safety bulletin board in every fixed workplace (establishment) that has 8 or more employees. Make sure the safety bulletin board is large enough to post information such as the following:
  - Safety bulletins
  - Safety newsletters
  - Safety posters
  - Accident statistics
  - Other safety educational material

Note:

You may want to post your emergency phone numbers on the safety bulletin board.

Notes

WISHA Poster

WAC 296-800-200

Rule

YOUR RESPONSIBILITY:

To post the WISHA poster, which informs your employees of their job safety and health protection rights

WAC 296-800-20005

Post and keep a WISHA poster in your workplace

You must:

- Post it where it can easily be seen by employees and keep it in good condition.

Note:

- Other programs within Labor and Industries may require other workplace posters. These are:
  - Job safety and health protection

    and
  - Notice to employees -- If a job injury occurs

    and
  - Your rights as a nonagricultural worker
- You can obtain a free copy of Labor and Industries posters from any Labor and Industries office or by printing it off our website (http://www.lni.wa.gov/ipub/101-054-000.htm). You can find the Labor and Industries office closest to you by:
- Checking the Resource Section of this book for regional offices.

  or
  - Calling 1-800-4BE SAFE (1-800-423-7233)

    or
  - http://www.lni.wa.gov/wisha/question.htm#contact

Notes

YOUR RESPONSIBILITY:

To provide and maintain adequate lighting in your workplace

WAC 296-800-21005

Provide and maintain adequate lighting

Note:

This section establishes minimal levels of lighting for safety purposes only. Guidelines pertaining to optimal levels of lighting and illumination may be found in Practice for Industrial Lighting, ANSI/IES RP7-1979. (See the Resource Section of this book on how to contact ANSI.)

You must

- Provide and maintain adequate lighting for all work activities in your workplace. See the following table:

Lighting Table		
Activity	**Minimum acceptable average lighting level in an area: (Foot-candles)**	**Any one single measurement used to determine the average lighting level* can't be less than: (Foot-candles)**
Indoor task	10	5
Outdoor task	5	2.5
Nontask activities for both indoor and outdoor	3	1.5

* Lighting levels must be measured at 30 inches above the floor/working surface at the task.

You must

- Have adequate light for employees to see nearby objects that might be potential hazards or to see to operate emergency controls or other equipment, if general lighting isn't available.

-Continued-

Rule

WAC 296-800-21005 (Continued)

Note:

- Lighting levels can be measured with a light meter.
- Conversion information: 1 foot-candle =1 lumen incident per square foot =10.76 lux.

Housekeeping, Drainage, & Storage

WAC 296-800-220

Summary

YOUR RESPONSIBILITY:

To provide your employees with a clean, dry, pest-free workplace

Note:

The introduction has important information about building, electrical and fire codes that may apply to you in addition to WISHA rules. See "How do the WISHA rules relate to building, fire, and electrical codes" in the introduction section of this book.

You must

Housekeeping

Keep your workplace clean
WAC 296-800-22005 ..... Page 220-3

Sweep and clean your workplace to minimize dust
WAC 296-800-22010 ..... Page 220-3

Keep your workplace free of obstacles that interfere with cleaning
WAC 296-800-22015 ..... Page 220-3

Control pests in your workplace
WAC 296-800-22020 ..... Page 220-4

Make sure floors are maintained in a safe condition
WAC 296-800-22022 ..... Page 220-5

Drainage

Keep your workroom floors dry, when practical
WAC 296-800-22025 ..... Page 220-5

Provide proper drainage
WAC 296-800-22030 ..... Page 220-6

-Continued-

Summary

WAC 296-800-220 (Continued)
Storage

Store things safely
WAC 296-800-22035 ..... Page 220-6

Control vegetation in your storage areas
WAC 296-800-22040 ..... Page 220-7

HOUSEKEEPING

WAC 296-800-22005
Keep your workplace clean

You must

- Keep all areas of your workplace, passageways, storage rooms, and service rooms in a clean, orderly and sanitary condition to the extent the nature of the work allows.

WAC 296-800-22010
Sweep and clean your workplace to minimize dust

You must

- Sweep and clean your workplace in a way that minimizes dust in the air as much as possible.
- When practical, clean after hours so that your employees aren't exposed to dust in the air on the job.

WAC 296-800-22015
Keep your workplace free of obstacles that interfere with cleaning

You must

- Keep your workplace clear of obstructions such as nails, splinters, loose boards and unnecessary holes and openings to make cleaning easier and more effective.

Rule

WAC 296-800-22020

Control pests in your workplace

You must

- Make sure each building in your workplace is constructed, equipped and maintained so it restricts pests from entering or living in it. Pests include animals such as:
  - Rodents (rats, mice, and squirrels).
  - Birds (starlings, pigeons, and swallows).
  - Insects (bees, wasps, and mosquitoes).
- Take steps to effectively control pests in your workplace, if they are detected.
  - Carry out a continuing and effective control program in the areas of your workplace where pests have been detected.

Note:

- By handling dead or live pests including their waste products, attached parasites and other contaminated materials, your employees may be exposed to certain health risks. These risks include, but aren't limited to: Hanta virus, rabies, lyme disease and psittacosis. Contact your local L&I office (see Resource Section of this book) or the public health department for more information about health risks and proper pest handling and disposal techniques.
- "Workplace" includes storage areas.

WAC 296-800-22022

Make sure floors are maintained in a safe condition

You must

- Make sure floors are kept free of debris. This includes:
  - Buildings
  - Platforms
  - Walkways and driveways
  - Storage yards
  - Docks
- Use a nonslip coating on all polished floors.

DRAINAGE

WAC 296-800-22025

Keep your workroom floors dry, when practical

You must

- Do the following to help keep your employees dry if wet processes are used in your work area:
  - Maintain drainage away from the work area;

    and
  - Provide false floors, platforms, or other dry places where employees can stand, where practical

    or
  - Provide appropriate waterproof footgear.

Rule

WAC 296-800-22030

Provide proper drainage

You must

- Provide all areas where employees work, such as yards, basements, or garages, with adequate drainage.

STORAGE

WAC 296-800-22035

Store things safely

You must:

- Store materials so they don't create a hazard.
- Keep workplace storage areas free from accumulation of materials that could create hazards from tripping, fire, or explosion.
- Secure stored items such as bundles, containers, and bags to prevent them from falling, sliding, or collapsing by doing one or more of the following:
  - Stacking
  - Racking
  - Blocking
  - Interlocking
  - Otherwise securing them

-Continued-

WAC 296-800-22035 (Continued)

- Make sure stored items are limited in height so that they are stable and secure to prevent sliding or collapse.

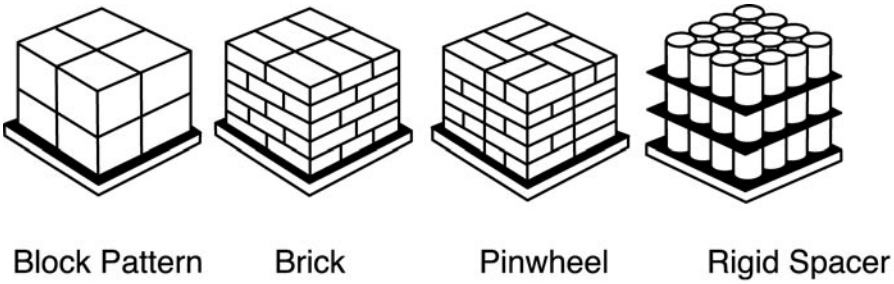

WAC 296-800-22040

Control vegetation in your storage areas

You must

- Control vegetation in your storage areas when necessary to create a safe working environment.

Notes

Drinking Water, Bathrooms, Washing Facilities,& Waste Disposal

WAC 296-800-230

Summary

YOUR RESPONSIBILITY:

To provide safe drinking (potable) water, bathrooms, washing facilities, eating areas and garbage and waste disposal in your workplace

You must

GENERAL REQUIREMENTS FOR ALL WORKPLACES

DRINKING WATER

Provide safe drinking (potable) water in your workplace
WAC 296-800-23005 ..... Page 230-4

Clearly mark water outlets that are not-fit-for-drinking (non-potable)
WAC 296-800-23010 ..... Page 230-5

Make sure that systems delivering the not-fit-for-drinking (non-potable) water prevent backflow into drinking water systems
WAC 296-800-23015 ..... Page 230-7

BATHROOMS AND WASHING FACILITIES

Provide bathrooms for your employees
WAC 296-800-23020 ..... Page 230-7

Provide convenient, and clean washing facilities
WAC 296-800-23025 ..... Page 230-9

-Continued-

Drinking Water, Bathrooms, Washing Facilities,& Waste Disposal

WAC 296-800-230

Summary

WAC 296-800-230 (Continued)

EATING AREAS AND FOOD SERVICES

Make sure eating areas are safe and healthy
WAC 296-800-23040 ..... Page 230-9

Follow these requirements if you provide food service to your employees
WAC 296-800-23045 ..... Page 230-10

GARBAGE AND WASTE DISPOSAL

Dispose of garbage and waste safely
WAC 296-800-23050 ..... Page 230-10

Remove garbage and waste in a way that doesn't create a health hazard
WAC 296-800-23055 ..... Page 230-11

LUNCHROOMS AND PERSONAL SERVICE ROOMS

Provide a separate lunchroom if employees are exposed to toxic substances if they are allowed to eat and drink on the job site
WAC 296-800-23060 ..... Page 230-11

Provide showers when required for employees working with chemicals
WAC 296-800-23065 ..... Page 230-12

Provide change rooms when required
WAC 296-800-23070 ..... Page 230-13

Make sure any work clothes you provide are dry
WAC 296-800-23075 ..... Page 230-13

-Continued-

WAC 296-800-230 (Continued)

Note:

Some industries may have additional rules on bathrooms and washing facilities. Some examples include:

Industry	WAC
Agriculture; Indoor Sanitation and Temporary Labor Camps	Chapter 296-307 WAC
Carcinogens; General Regulated Area Requirements	WAC 296-62-07308
Charter Boats	WAC 296-115-050
Compressed Air Work	WAC 296-36-160(5)
Construction	WAC 296-155-140
Temporary Labor Camps	WAC 296-24-12507

Drinking Water, Bathrooms, Washing Facilities,& Waste Disposal

WAC 296-800-230

Rule

DRINKING WATER
WAC 296-800-23005

Provide safe drinking (potable) water in your workplace

You must

(1) Provide safe drinking (potable) water for employees for:

- Washing themselves.
- Personal service rooms.
- Cooking.
- Washing premises where food is prepared or processed.
- Washing food, eating utensils, or clothing.

(2) Make sure when providing movable or portable drinking water dispensers that they are:

- Capable of being closed.
- Kept in sanitary condition.
- Equipped with a tap.

(3) Prohibit employees from:

- Using shared drinking cups or utensils.
- Using open containers such as barrels, pails, and tanks that require employees to dip or pour drinking water, even if the containers have covers.

-Continued-

Drinking Water, Bathrooms, Washing Facilities,& Waste Disposal

WAC 296-800-230

Rule

WAC 296-800-23005 (Continued)

Definition:

- Potable water is water that you can safely drink that meets specific safety standards prescribed by the United States Environmental Protection Agency's *National Interim Primary Drinking Water Regulations*, published in 40 CFR Part 141, and 40 CFR 147.2400.
- Personal service rooms are used for activities not directly connected with a business'production or service function such as first aid, medical services, dressing, showering, bathrooms, washing and eating.

WAC 296-800-23010

Clearly mark the water outlets that are not-fit-for-drinking (non-potable)

You must

(1) Mark water outlets that aren't fit for drinking (nonpotable), such as those used for industrial processes or firefighting, so they won't be used for:

- Drinking
- Washing themselves, except in emergencies
- Cooking
- Washing food, eating utensils, or clothing.

(2) Prohibit the use of nonpotable water containing substances that could create unsafe conditions such as:

- Concentrations of chemicals, such as lead or chlorine
- Fecal coliform bacteria.

-Continued-

Drinking Water, Bathrooms, Washing Facilities,& Waste Disposal

WAC 296-800-230

Rule

WAC 296-800-23010 (Continued)

Note:

As long as the nonpotable water is free of substances that could create unsafe conditions, the water can be used for cleaning both:

- Work premises used for activities other than food preparation or processing.

  and

- Personal service rooms, such as bathrooms.

Reference:

You may need to follow additional requirements for emergency washing facilities. See WAC 296-800-150, First Aid for more information.

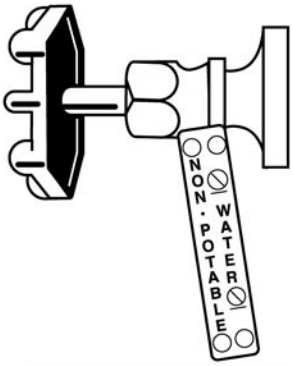

Outlets for water not fit to drink must be marked.

Drinking Water, Bathrooms, Washing Facilities,& Waste Disposal

WAC 296-800-230

Rule

WAC 296-800-23015

Make sure that systems delivering not-fit-for-drinking (nonpotable) water prevent backflow into drinking water systems

You must

- Make sure that systems delivering not-fit-for-drinking (nonpotable) water prevent backflow into drinking water systems.

BATHROOMS AND WASHING FACILITIES
WAC 296-800-23020

Provide bathrooms for your employees

Exemption:

You don't have to provide bathrooms:

- For mobile crews or at work locations not normally attended by employees, if there is transportation immediately available to nearby bathrooms that meet the requirements of this section.

You must

(1) Provide bathrooms with the appropriate number of toilets for your employees at every workplace based on Table 1.

- Have the appropriate number of toilets for each gender, based on the number of male and female employees at your workplace.
  - For example, if you have 37 men and 17 women, you need to have 3 toilets for the men and 2 toilets for the women, based on Table 1.
- Make sure each toilet is in a separate compartment with a door and walls or partitions for privacy.

-Continued-

Drinking Water, Bathrooms, Washing Facilities,& Waste Disposal

WAC 296-800-230

Rule

WAC 296-800-23020 (Continued)

Table 1
Required Number of Employee Toilets at Every Workplace

Maximum Number of Employees Present at Any One Time During a Shift	Minimum Number of Toilets Required
1 to 15	1
16 to 35	2
36 to 55	3
56 to 80	4
81 to 110	5
111 to 150	6
Over 150	One additional toilet for each additional 40 employees

Note:

A shared bathroom (multipple toilets without enclosures) counts as one toilet no matter how many toilets it contains. In bathrooms used only by men, urinals may be substituted for up to 1/3 of the required toilets.

You must

(2) Provide toilet paper and a toilet paper roll holder for each toilet.

(3) Make sure bathrooms are maintained in a clean and sanitary condition.

(4) Make sure the sewage disposal method doesn't endanger the health of employees.

Exemption:

Separate bathrooms for men and women aren't required if the bathroom:

- Will only be occupied by one person at a time.
- Can be locked from the inside.
- Contains at least one toilet.

Drinking Water, Bathrooms, Washing Facilities,& Waste Disposal

WAC 296-800-230

Rule

WAC 296-800-23025

Provide convenient, and clean washing facilities

Exemption:

You do **not** have to provide washing facilities for:

- Mobile crews, or work locations not normally attended by employees, if there is immediately available transportation to nearby washing facilities that meet the requirements of this rule.

You must

- Provide convenient and clean washing facilities for employees including:
  - Sinks or basins for personal washing.
  - Hot and cold water, or lukewarm (tepid), running water in each sink and basin.
  - Hand soap or similar cleaning agents.
  - One of the following:
    - Individual paper or cloth hand towels
    - Individual sections of clean continuous cloth toweling
    - Warm air blowers for drying hands, located near the sinks and basins.

EATING AREAS AND FOOD SERVICE
WAC 296-800-23040

Make sure eating areas are safe and healthy

You must

(1) Make sure employees aren't allowed to eat and drink in:

- Bathrooms
- Area exposed to toxic substances

(2) Make sure food isn't stored in bathrooms or areas exposed to toxic substances.

Drinking Water, Bathrooms, Washing Facilities,& Waste Disposal

WAC 296-800-230

Rule

WAC 296-800-23045

Follow these requirements if you provide food service to your employees

You must

- Make sure all food service facilities and operations you make available follow sound hygiene principles.
- Make sure the food is:
  - Unspoiled.
  - Protected from contamination during processing, preparation, handling, and storage.

GARBAGE AND WASTE DISPOSAL
WAC 296-800-23050

Dispose of garbage and waste safely

You must

(1) Make sure garbage containers are:

- Kept in clean and sanitary condition.
- Made from smooth, corrosion resistant materials.
- Easily cleaned or are disposable.
- Equipped with a solid tight-fitting cover unless you can keep them in a sanitary condition without a cover.

(2) Provide enough garbage containers to make sure they:

- Are conveniently located to encourage their use.
- Won't be overfilled.

Drinking Water, Bathrooms, Washing Facilities,& Waste Disposal

WAC 296-800-230

Rule

WAC 296-800-23055

Remove garbage and waste in a way that doesn't create a health hazard

You must

- Remove all sweepings, solid and liquid wastes, refuse, and garbage as often as needed to keep the workplace in a sanitary condition.

LUNCHROOMS AND PERSONAL SERVICE ROOMS
WAC 296-800-23060

Provide a separate lunchroom if employees are exposed to toxic substances if they are allowed to eat and drink on the job site

You must

(1) Provide a lunchroom separate from the work are if employees are exposed to toxic substances.

(2) Use Table 2 to determine the required square footage in your lunchroom based on the number of employees using the room at any one time.

Table 2
Maximum Number of Employees
Using Lunchroom at One Time

Number of persons	Square Feet per Person
25 and less	13
26-74	12
75-149	11
150 and over	10

Note:

You don't have to provide a separate lunchroom if it's convenient for employees to leave the workplace to eat and drink.

Drinking Water, Bathrooms, Washing Facilities,& Waste Disposal

WAC 296-800-230

Rule

WAC 296-800-23065

Provide showers when required for employees working with chemicals

You must

- Provide showers for employees if:
  - They work with chemicals that could cause an occupational illness;

    and
  - The chemicals remain on the skin between work shifts.
- Make sure employees who work with such chemicals shower at the end of their shifts.
  - Make sure showers have:
    - Soap or other cleansing agents
    - Hot and cold water with a common discharge line.
  - Provide individual, clean towels for each employee who is required to shower.
    - Provide at least one shower for every 10 employees (or every fraction of 10) of each gender.

Note:

Table 3 shows the number of showers to provide based on a "Fraction of 10."

Table 3

Number of Employees of Each Gender	Number of showers
1-10	1
11-20	2
21-30	3
31-40	4
41-50	5

Drinking Water, Bathrooms, Washing Facilities,& Waste Disposal

WAC 296-800-230

Rule

WAC 296-800-23070

Provide change rooms when required

You must

- Provide change rooms when employees are required by a particular standard to wear protective clothing because of the possibility of contamination with toxic materials.
- Make sure change rooms have separate storage facilities for street clothes and protective clothing.

WAC 296-800-23075

Make sure any work clothes you provide are dry

You must

- Make sure when providing work clothes to employees that the clothing provided is dry if the clothing:
  - Gets wet during use;

    or
  - Is washed before it is reused.

Notes

Environmental Tobacco Smoke

WAC 296-800-240

Summary

YOUR RESPONSIBILITY:

To control exposure to environmental tobacco smoke in your office work environment

You must

Control tobacco smoke in your building
WAC 296-800-24005 ..... Page 240-2

Control tobacco smoke that comes in from the outside
WAC 296-800-24010 ..... Page 240-4

Note:

This rule doesn't preempt any federal, state, municipal, or other local authority's regulation of indoor smoking that is more protective than this section.

Definition:

Office work environment is an indoor or enclosed occupied space where clerical work, administration, or business is carried out. In addition, it includes:

- Other workplace spaces controlled by the employer and used by office workers, such as cafeterias, meeting rooms, and washrooms.
- Office areas of manufacturing and production facilities, not including process areas.
- Office areas of businesses such as food and beverage establishments, agricultural operations, construction, commercial trade, services, etc.

Environmental Tobacco Smoke

WAC 296-800-240

Rule

WAC 296-800-24005

Control tobacco smoke in your building

Exemption:

The minimum criteria specified in this rule don't apply to outdoor structures provided for smokers such as gazebos or lean-tos.

You must

- Prohibit *smoking* in your office work environment

  or

- Restrict smoking inside your office work environment to designated enclosed smoking rooms that meet the following minimum criteria:
  - Identify smoking rooms clearly with signs.
  - Make sure the designated smoking rooms aren't in common areas, such as:
    - Places where nonsmoking employees are required to work or visit.
    - Restrooms
    - Washrooms
    - Hallways
    - Stairways
    - Cafeterias/lunchrooms
    - Meeting rooms.
  - Make sure that no employee is required to enter a designated smoking room while someone is smoking there.
  - Conduct cleaning and maintenance work in designated smoking rooms when smokers aren't present.

-Continued-

WAC 296-800-24005 (Continued)

You must

- Ventilate designated smoking rooms at a rate of at least 60 cubic feet per minute per smoker (calculated on the basis of the maximum number of smokers expected during the course of a normal working day), which can be supplied by transfer air from adjacent areas.
  - Maintain enough negative air pressure in designated smoking areas to prevent smoke from migrating into nonsmoking areas, at all times.
  - Operate a separate mechanical exhaust system in designated smoking rooms, to make sure exhausted air moves directly outside, and doesn't recirculate into nonsmoking areas.
  - Prohibit use of the designated smoking room if the mechanical exhaust system isn't working properly, until repairs are completed.

Note:

This ventilation rate is recommended for occupancies of no more than 7 people for every 100 square feet of net occupied space in the designated smoking room.

Environmental Tobacco Smoke

WAC 296-800-240

Rule

WAC 296-800-24010

Control tobacco smoke that comes in from the outside

You must

- Use engineering or administrative controls to minimize the amount of tobacco smoke that comes into your office(s) from outside the building.
  - Make sure that outside smoking areas used by your employees aren't close to doorways, air intakes, and other openings that may allow airflow directly into an office.

Note:

- Administrative controls change the way workers do their job, reducing work exposure to potential hazards. This includes such things as:
  - Job rotation.
  - Wetting down dusty areas.
  - Having employees shower after exposure to potentially harmful substances.
  - Maintaining equipment properly.
  - Cleaning up work areas to control the effect of potential hazards.
- Engineering controls let you plan or physically change the machinery or work environment to prevent employee exposure to potential hazards. This includes any modification of plant equipment, processes, or materials to reduce employees' exposure to toxic materials or harmful physical agents.

Stairs & Stair Railings

WAC 296-800-250

Summary

YOUR RESPONSIBILITY:

To make sure stairs used by employees are safe

You must

Provide fixed stairs where required
WAC 296-800-25005 ..... Page 250-2

Provide stairs that minimize hazards
WAC 296-800-25010 ..... Page 250-4

Provide handrails and stair railings
WAC 296-800-25015 ..... Page 250-4

Exemptions:

This rule does **not** apply to:

- Stairs used exclusively for fire exit purposes.
- Construction operations (See WAC 296-24-06503 for the specifications for the safe design and construction of fixed general industrial stairs).
- Private buildings or residences.
- Articulated stairs (for example, stairs used at a marina).
- Nonindustrial and monumental stairs are excluded as they aren't industrial stairs; however, when public and private building steps are located at loading or receiving docks, in maintenance areas, etc., or are used exclusively by employees, the requirements of this rule must apply.

Note:

The introduction has important information about building, electrical and fire codes that may apply to you in addition to WISHA rules. See “How do the WISHA rules relate to building, fire, and electrical codes” in the Introduction Section of this book.

Stairs & Stair Railings

WAC 296-800-250

Rule

WAC 296-800-25005

Provide fixed stairs where required

You must

- Install fixed stairs where:
  - Employees travel between different levels on a predictable and regular basis.
  - Access to platforms is required to give routine attention to equipment under operation.
  - Daily movement between elevations is required to gauge, inspect, and maintain equipment where those work assignments may expose employees to acids, caustics, gases, or other harmful substances.
  - Carrying tools or equipment by hand is a normal work requirement.
- Not use spiral stairways except as secondary exit routes.

Note:

- You can use fixed ladders for climbing elevated structures, such as tanks, towers, and overhead traveling cranes, when their use is common practice in your industry.
- You can use winding stairways on tanks and similar round structures if the structure's diameter is at least 5 feet.
- You could use a spiral stairway as an exit route in a restricted area that lacks room for a conventional stairway.

-Continued-

WAC 296-800-25005 (Continued)

Definitions:

- A stairway or fixed stairs is a series of steps and landings:
  - Leading from one level or floor to another
  - Leading to platforms, pits, boiler rooms, crossovers, or around machinery, tanks, and other equipment
  - Used more or less continuously or routinely by employees or only occasionally by specific individuals
  - With 3 or more risers.
- A riser is the vertical part of the step at the back of a tread that rises to the front of the tread above.
- A tread is the horizontal part of the step. Tread width is the distance from the front of the tread to the back.

Stair Components

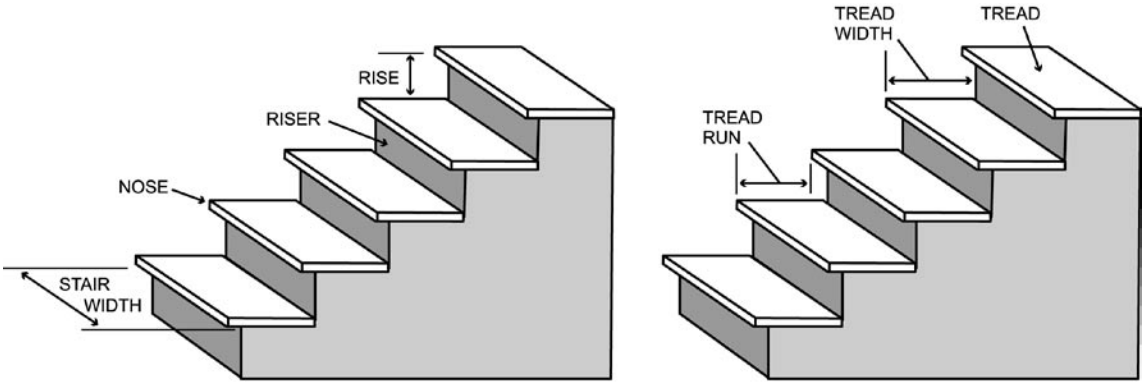

Stair railing is removed to show detail.

Stairs & Stair Railings

WAC 296-800-250

Rule

WAC 296-800-25010

Provide stairs that minimize hazards

You must

(1) Make sure stairs have slip-resistant treads.

(2) Make sure that stairs with four or more risers have:

- Railings on the open sides of all exposed stairways and stair platforms
- Handrails on at least one side of closed stairways, preferably on the right side while descending.

(3) Provide a platform where doors or gates open directly on a stairway. The swing of the door must not reduce the effective width of the platform to less than 20 inches.

Note:

To see all of the rules for building fixed stairs, refer to WAC 296-24-75011 and 296-24-765 of the General Safety and Health Standard.

WAC 296-800-25015

Provide handrails and stair railings

Exemption:

Vehicle service pit stairways are exempt from the rules for stairway railing and guards, if they would prevent a vehicle from moving into a position over the pit.

Definition:

- A handrail is a single bar or pipe on brackets from a wall or partition to provide a continuous handhold for persons using a stair.
- A stair railing is a vertical barrier attached to a stairway with an open side, to prevent falls. The top surface of the stair railing is used as a handrail.

-Continued-

WAC 296-800-25015 (Continued)

You must

- Make sure stairways less than 44 inches wide have:
  - At least one handrail, preferably on your right side as you go down the stairs, if both sides are enclosed.

    or
  - At least one stair railing on the open side, if one side is open.

    or
  - One stair railing on each side, if both sides are open.
- Make sure stairways more than 44 inches wide but less than 88 inches wide have:
  - One handrail on each enclosed side.
  - One stair railing on each open side.
- Make sure stairways at least 88 inches wide have:
  - One handrail on each enclosed side.
  - One stair railing on each open side.
  - One intermediate stair railing located approximately midway of the width.
- Equip winding stairs with a handrail, offset to prevent walking on all portions of the treads, less than 6 inches wide.

Reference:

Railings must consist of a top rail, intermediate rail, and posts. To see all of the rules for building handrails and stairway railings, refer to WAC 296-24-75011 of the General Safety and Health Standard.

Notes

Floor Openings, Floor Holes, & Open-Sided Floors

WAC 296-800-260

Summary

YOUR RESPONSIBILITY:

To safely guard floor openings, floor holes, and open-sided floors in your workplace

You must:

Guard or cover floor openings and floor holes
WAC 296-800-26005 ..... Page 260-2

Protect open-sided floors and platforms
WAC 296-800-26010 ..... Page 260-5

Floor Openings, Floor Holes, & Open-Sided Floors

WAC 296-800-260

Rule

WAC 296-800-26005

Guard or cover floor openings and floor holes

Definition:

- ***A floor opening*** is an opening in any floor, platform, pavement, or yard that measures at least 12 inches in its smallest dimension and through which a person can fall.

  Examples of floor openings are:

  - Hatchways
  - Stair or ladder openings
  - Pits
  - Large manholes

- The following are not considered floor openings:
  - Openings occupied by elevators
  - Dumbwaiters
  - Conveyors
  - Machinery
  - Containers

- ***A floor hole*** is an opening in any floor, platform, pavement, or yard that measures at least one inch but less than 12 inches at its smallest dimension and through which materials and tools (but not people) can fall.

  Examples of floor holes are:

  - Belt holes
  - Pipe openings
  - Slot openings

-Continued-

Floor Openings, Floor Holes, & Open-Sided Floors

WAC 296-800-260

Rule

WAC 296-800-26005 (Continued)

You must

(1) Guard stairway floor openings, temporary floor openings and floor holes.

- Protect all stairway floor openings with a railing. The railing must protect all open sides except the stairway entrance side.

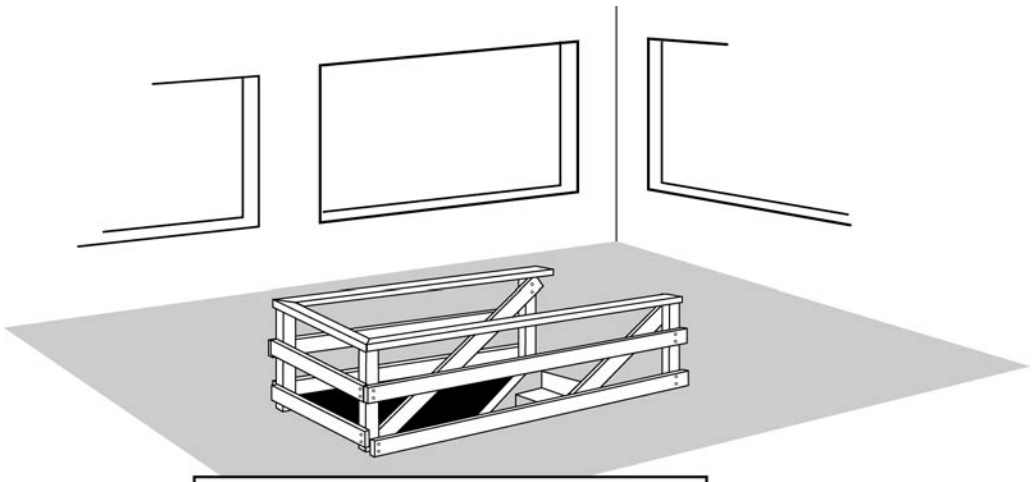

Guardrail installed around all sides of stairway opening except at the entrance.

- Use a hinged cover and a removable railing where traffic across an infrequently used stairway floor opening prevents the installation of a fixed railing. This removable railing must protect all open sides except the stairway entrance side.
- Protect temporary floor openings by either a railing or by a person who constantly attends the opening.

-Continued-

Floor Openings, Floor Holes, & Open-Sided Floors

WAC 296-800-260

Rule

WAC 296-800-26005 (Continued)

- Protect exposed floor holes into which a person can accidentally walk by either
  - A railing with a toeboard on all open sides.

    or
  - A floor hole cover of standard strength and construction that can be hinged in place. When a floor hole cover isn't in place, the hole must be protected by a removable railing or constantly attended by someone.
- Provide covers for floor openings. Floor opening covers may be of any material that has a safety factor of 4, or is strong enough to hold up to 4 times the intended load. Covers that don't project more than one inch above the floor level may be used providing all edges are beveled (slanted) to prevent tripping. All hinges, handles, bolts, or other parts of a cover must set flush with the floor or cover surface.

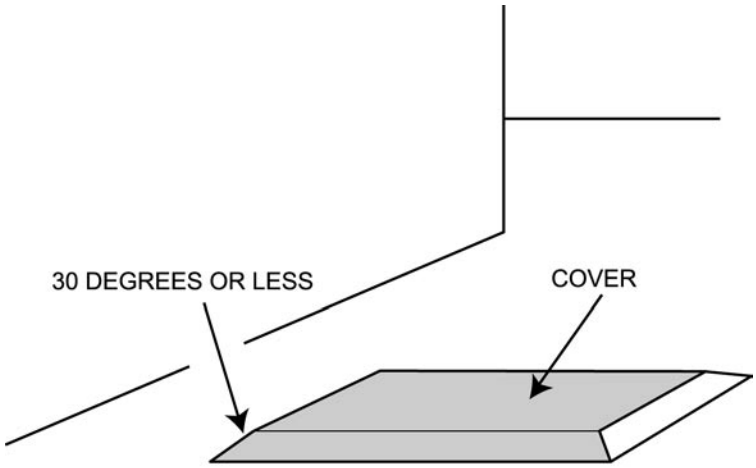

A cover that projects above the surface must be beveled to reduce the tripping hazard.

(2) Prevent tools and materials from falling through a floor hole. The floor hole must be protected by a cover that leaves an opening no more than one inch wide and is securely held in place. This applies only to floor holes that persons can't accidentally walk into on account of fixed machinery, equipment, or walls.

Floor Openings, Floor Holes, & Open-Sided Floors

WAC 296-800-260

Rule

WAC 296-800-26010

Protect open-sided floors and platforms

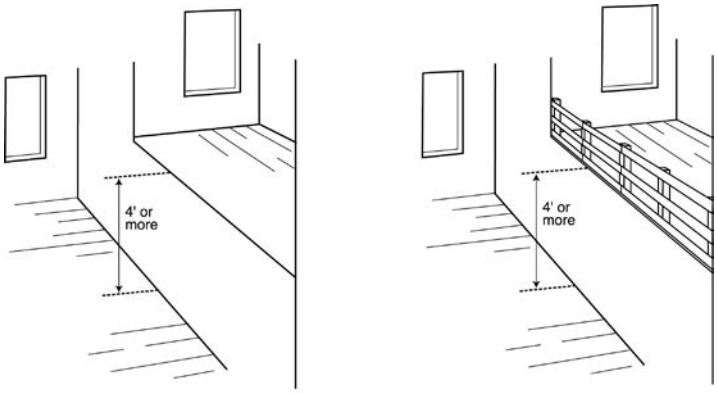

OPEN FLOOR (Unguarded) GUARDED FLOOR

You must

(1) Guard open-sided floors and platforms.

- Guard open-sided floors and platforms 4 feet or more above adjacent floor or ground level by a railing. The entrance to a ramp, stairway, or fixed ladder doesn't need a railing.
- Guard open-sided floors, walkways and platforms above or adjacent to dangerous equipment, pickling or galvanizing tanks, degreasing units, and other similar hazards, regardless of height with a railing and toeboard.

(2) Make sure tools and loose materials aren't left on overhead platforms and scaffolds.

Note:

- Where the guarding rules above don't apply because employees exposure to falls is infrequent (not on a predictable and regular basis), you must comply with the Personal Protective Equipment (PPE) rules (WAC 296-800-160) or other effective fall protection must be provided.
- You can find the minimum requirements for standard railings of various types of construction in WAC 296-24-75011.

Notes

Workplace Structural Integrity

WAC 296-800-270

Summary

YOUR RESPONSIBILITY:

To make sure that the buildings, floors, and other structures in your workplace are safe, well-built, and not overloaded

You must

Not overload floors or roofs
WAC 296-800-27005 ..... Page 270-2

Make sure that floors are safe
WAC 296-800-27010 ..... Page 270-2

Make sure floors can support equipment that moves or has motion
WAC 296-800-27015 ..... Page 270-3

Post approved load limits (weight limits) for floors
WAC 296-800-27020 ..... Page 270-3

Note:

The Introduction has important information about fire, building and electrical codes that may apply to you in addition to WISHA rules. See "How do the WISHA rules relate to fire, building and electrical codes" in the Introduction Section of this book.

Rule

WAC 296-800-27005

Not overload floors or roofs

You must

- Prohibit overloading roofs and floors of any building or other structure with more weight than is approved by the building official.

WAC 296-800-27010

Make sure that floors are safe

You must

- Make sure that floors including their parts and structural members are safe.
- Make sure floors are of substantial construction and kept in good repair. This includes floors of:
  - Buildings
  - Platforms
  - Walks and driveways
  - Storage yards
  - Docks.
- Make sure that structures are designed, constructed, and maintained to provide a safety factor of 4 times the imposed maximum strain.
  - If you notice bowing, cracking, or other indications of excessive strain on a structure, you must take action to make sure it is safe.

Note:

This rule applies to all buildings or those that have had complete or major changes or repairs built after 5/7/74.

Rule

WAC 296-800-27015

Make sure floors can support equipment that moves or has motion

You must

- Make sure flooring of buildings, ramps, docks, trestles and other fixed structures that supports equipment that moves or has motion such as vibration, must not be less than 2 1/2 inch material.

Note:

Where flooring is covered by steel floor plates, 2-inch material may be used.

WAC 296-800-27020

Post approved load limits (weight limits) for floors

You must

- Post approved load limits (weight limits) for floors used for mercantile, business, industrial or storage purposes in an obvious place.
- As the owner, or owner's agent, of a building (or other part of a workplace) post the load approved by the building official by:
  - Supplying and affixing a durable metal sign that is marked with the approved load.
  - Placing the metal sign in an obvious spot in the space to which it applies.
  - Replacing the metal sign if it is lost, defaced, damaged, or removed.

Note:

This rule applies to the floor that supports shelving, but not to the shelves themselves.

Notes

Basic Electrical

WAC 296-800-280

Summary

YOUR RESPONSIBILITY:

To protect your employees from hazards when working with electrical equipment, tools, and appliances

You must

Inspect all electrical equipment your employees use to make sure the equipment is safe
WAC 296-800-28005 ..... Page 280-4

Make sure all electrical equipment is used for its approved or listed purpose
WAC 296-800-28010 ..... Page 280-5

Make sure electrical equipment used or located in wet or damp locations is designed for such use
WAC 296-800-28015 ..... Page 280-6

Make sure electrical equipment that isn't marked by the manufacturer can't be used
WAC 296-800-28020 ..... Page 280-7

Identify disconnecting means
WAC 296-800-28022 ..... Page 280-8

Maintain electrical fittings, boxes, cabinets, and outlets in good condition
WAC 296-800-28025 ..... Page 280-9

Maintain all flexible cords and cables in good condition and use safely
WAC 296-800-28030 ..... Page 280-11

Guard electrical equipment to prevent your employees from electrical hazards
WAC 296-800-28035 ..... Page 280-16

-Continued-

Summary

WAC 296-800-280 (Continued)

Make sure electrical equipment is effectively grounded
WAC 296-800-28040 ..... Page 280-18

Make sure electrical equipment has overcurrent protection
WAC 296-800-28045 ..... Page 280-22

Exemptions:

- These rules apply to all electrical equipment used in the workplace, except for:
  - Electrical installations and equipment on ships, aircraft and all automotive vehicles other than mobile homes and recreational vehicles.
  - Electrical installations and equipment used to generate, transmit, transform or distribute power exclusively for operation of rolling stock.
  - Electrical installations used exclusively for signaling and communicating with rolling stock.
  - Installations underground in mines.
  - Installations of communication equipment located outdoors or inside buildings used and controlled exclusively by communication utilities.
  - Installations controlled and used exclusively by electric utilities for communication or metering.

  or

For generating, controlling, transforming, transmitting and distributing electric energy in buildings used exclusively by the company located:

- Outdoors on property owned or leased by the utility;

  or

- On public highways, streets and roads;

  or

- Outdoors by established rights on private property.

-Continued-

WAC 296-800-280 (Continued)

Note:

- The introduction has important information about fire, building and electrical codes that may apply to you in addition to WISHA rules. See "How do the WISHA rules relate to fire, building and electrical codes" in the introduction section of this book.
- These rules guide how electrical equipment is used and maintained in your workplace. They shouldn't be used in place of your local electrical codes if you are installing electrical wiring, electrical circuits or electrical distribution equipment.
- This rule applies to 600 volts or less. Requirements for specific equipment or special installation are found in Chapter 296-24 WAC, Part L.

Rule

WAC 296-800-28005

Inspect all electrical equipment your employees use to make sure the equipment is safe

You must

- Inspect electrical equipment to make sure there are no recognized hazards likely to cause your employees' death or serious physical harm. Determine the safety of the equipment by using the following list:
  - Has been approved or listed by a recognized testing laboratory, such as Underwriters Laboratories (UL) or other approving agency.
  - Is approved, or listed as approved, for the purpose it is being used.
  - Has strong and durable guards providing adequate protection including parts designed to enclose and protect other equipment.
  - Is insulated.
  - Won't overheat under conditions of use.
  - Won't produce arcs during normal use.
  - Is classified by:
    - Type
    - Size
    - Voltage
    - Current capacity
    - Specific use
    - Other factors.

WAC 296-800-28010

Make sure all electrical equipment is used for its approved or listed purpose

Definitions:

- ***Electrical outlets*** are places on an electric circuit where power is supplied to equipment through receptacles, sockets and outlets for attachment plugs.
- ***Receptacles*** are outlets that accept a plug to supply electric power to equipment through a cord or cable.

You must

- Make sure electrical outlets are rated equal or greater to the electrical load supplied.
- Make sure the proper mating configuration exists when connecting the attachment plug to a receptacle.
- Make sure when electrical outlets, cord connectors, and receptacles are joined, they accept the attachment plug with the same voltage or current rating.

SOME COMMON ELECTRICAL OUTLET (RECEPTACLE) CONFIGURATIONS

	15 Ampere	20 Ampere	30 Ampere	50 Ampere
Two Pole 3 - Wire Grounding 125 Volt		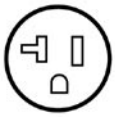	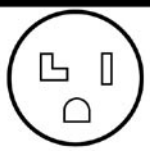	
Three Pole 3 - Wire 125/250 Volt				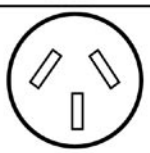

Note: A 20-ampere "T-solt" outlet or cord connector may accept a 15-ampere attachment plug of the same voltage rating.

Rule

WAC 296-800-28015

Make sure electrical equipment used or located in wet or damp locations is designed for such use

You must

- Make sure fixtures and receptacles located in wet or damp locations are approved for such use. They must be constructed or installed so that water can't enter or accumulate in wireways, lampholders, or other electrical parts.
- Make sure cabinets, fittings, boxes, and other enclosures in wet or damp locations are installed to prevent moisture or water from entering and accumulating inside.
  - In wet locations these enclosures must be weatherproof.
  - Switches, circuit breakers, and switchboards located in wet locations must be in weatherproof enclosures.

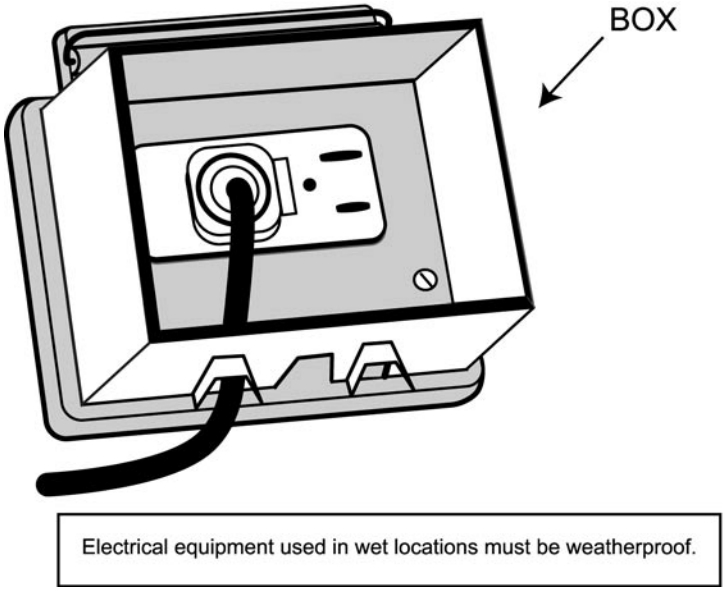

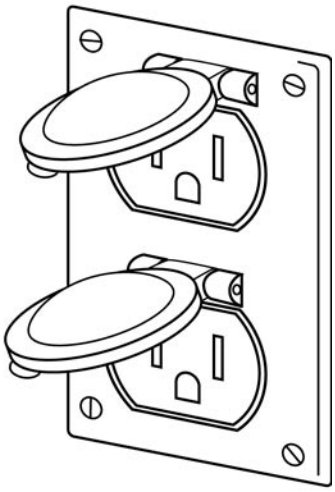

WAC 296-800-28020

Make sure electrical equipment that isn't marked by the manufacturer can't be used

You must

- Make sure markings are durable and appropriate to the environment.
- Appropriate markings include:
  - The manufacturer's name

    or
  - Trademark;

    or
  - The organization responsible for the product;

    and
  - Voltage, current and wattage, or other ratings as necessary.

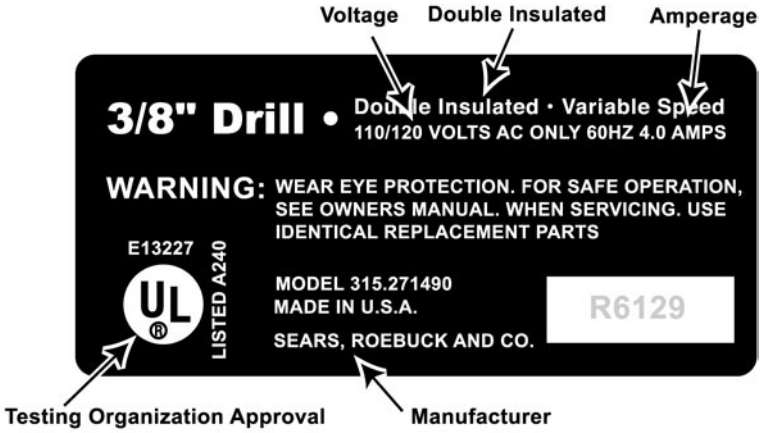

Electrical tools and equipment marked to show manufacturer, approvals and power requirements.

Rule

WAC 296-800-28022

Identify disconnecting means

You must

- Make sure the disconnect means (such as on/off switches and circuit breakers) is marked to show when it's open and closed and what equipment it controls, unless located and arranged so the purpose is obvious.
- Make sure each service, feeder and branch circuit is marked, at its disconnecting means or overcurrent device, to show when the circuit is open and closed and what circuit it controls, unless located and arranged so the purpose is obvious.
- Make sure markings are durable and appropriate to the environment.

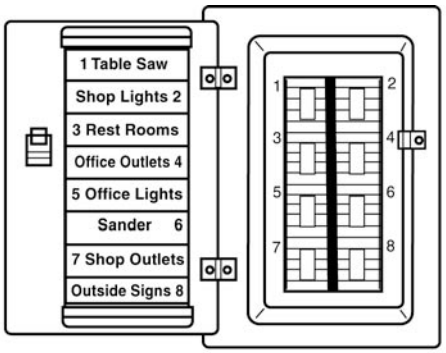

Electrical panel circuit breakers labeled to show the equipment or circuits they control.

WAC 296-800-28025

Maintain electrical fittings, boxes, cabinets and outlets in good condition

You must

(1) Do the following to covers and openings.

- Do the following when conductors enter boxes, cabinets, or fittings:
  - Protect the conductor (wires) from abrasion.
  - Effectively close the openings where conductors enter.
  - Effectively close all unused openings.
- Provide pull boxes, junction boxes, and fittings with covers approved for the purpose.
- Make sure each outlet box has a cover, faceplate, or fixture canopy in completed installations.
- Make sure covers for outlet boxes with openings for flexible cord pendants have bushings to protect the cord, or have a smooth and well rounded surface where the cord touches the opening.
- Ground metal covers.

(2) Make sure the area in front of electrical panels, circuit breaker boxes and similar equipment which operates at 600 volts or less:

- Has sufficient working area at least 30 inches wide for operation and maintenance of the equipment.
- Is kept clear and free of stored materials so that employees can access this equipment for servicing, adjustments or maintenance.
- Has at least one access route to provide free and unobstructed access.
- Has at least 3 feet of working space in front, measured from the exposed live parts or the enclosure front (See the work clearance table on the following page).
- Has adequate indoor lighting (WAC 296-800-210).
- Has at least 6 feet 3 inches of headroom.

-Continued-

WAC 296-800-28025 (Continued)

This table shows the area you must keep clear depending on the layout of the electrical equipment.

Conditions*	0 - 150 Volts to ground	151 - 600 volts to ground
a	3 ft.	3 ft.
b	3 ft.	3-1/2 ft.
c	3 ft.	4 ft.

Minimum clear distances may be 2 feet 6 inches for equipment built or installed before 3/20/82.

*Conditions a, b, and c are as follows:

a = Exposed live parts on one side and no live or grounded parts on the other side of the working space, or exposed live parts on both sides effectively guarded by suitable wood or other insulating material. Insulated wire or insulated bus bars operating at not over 300 volts aren't considered live parts.

b= Exposed live parts on one side and grounded parts on the other side

c = Exposed live parts on both sides of the workspace (not guarded as provided in condition (a) with the operator between the panels)

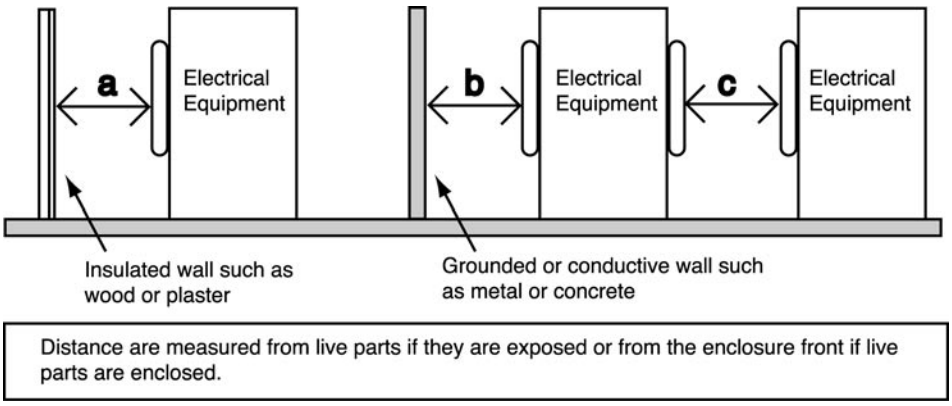

WAC 296-800-28030

Maintain all flexible cords and cables in good condition and use safely

Exemption:

These rules don't apply to cords and cables that are an internal part of factory assembled appliances and equipment, like the windings on motors or wiring inside electrical panels.

Note:

Flexible cords and cables are typically used to connect electrical equipment to a power source. These cords can have an electrical plug to connect to a power source or can be permanently wired into the power source. The terms flexible cords, extension cord, cables and electrical cords all refer to a type of flexible cord.

You must

(1) Perform visual inspections.

- On portable cord- and plug-connected equipment and extension cords before use on each work shift. Defects and damage to look for include:
  - Loose parts.
  - Deformed or missing pins.
  - External defects and damage.
  - Damage to the outer covering or insulation.
  - Pinched or crushed covering or insulation that might indicate internal damage.

Exemption:

You don't need to visually inspect portable cord- and plug-connected equipment and extension cords that stay connected once in place and aren't exposed to damage until they are moved.

-Continued-

Rule

WAC 296-800-28030 (Continued)

You must

- Remove from service any defective or damaged cord until repaired and tested.
- Make sure flexible cords and cables are used as described.

(2) Use.

- Use flexible cords only as follows:
  - Wiring of equipment and appliances.
  - Data processing cables approved as a part of the data processing system.
  - Pendants.
  - Wiring for fixtures.
  - Connecting portable lamps or appliances to an approved outlet with an attachment plug.
  - Connecting stationary equipment that is frequently changed with an attachment plug energized from an approved outlet.
  - Preventing noise or vibration transmission.
  - Appliances that have been designed to permit removal for maintenance and repair if the appliance is equipped with an attachment plug energized from an approved outlet.
  - Elevator cables.
  - Wiring of cranes and hoists.

-Continued-

WAC 296-800-28030 (Continued)

Common Acceptable Uses of Flexible Cords

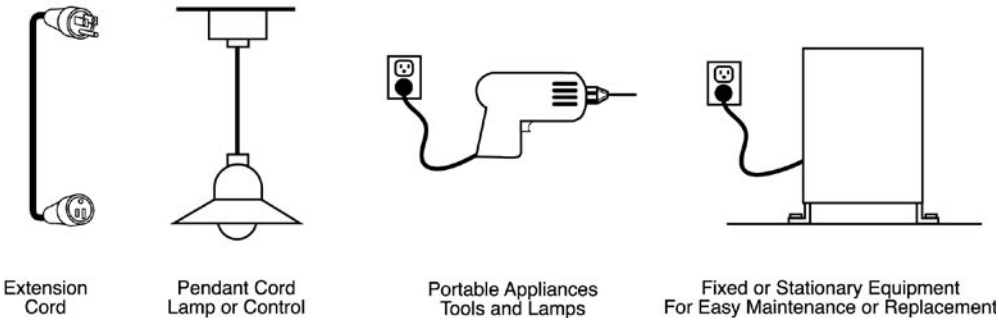

Note:

Extension cords (flexible cord sets) may be used on a temporary basis if you follow the rules described in the temporary use section, WAC 296-800-28030(3).

You must

- Not use flexible cords in the following ways:
  - As a substitute for fixed wiring of a structure
  - To run through holes in walls, ceilings, or floors
  - To run through doorways, windows, or similar openings
  - To attach to building surfaces
  - To conceal behind building walls, ceilings, or floors
  - To raise or lower equipment

-Continued-

Rule

WAC 296-800-28030 (Continued)

- Make sure flexible cords and cables are approved and suitable for:
  - The way they will be used.
  - The location where they will be used.
- Not fasten or hang cords and equipment in any way that could cause damage to the outer jacket or insulation of the cord.
- Make sure insulation on flexible cords and cables is intact.
- Make sure flexible cords and electrical cords are:
  - Connected to devices and fittings so that any pulling force on the cord is prevented from being directly transmitted to joints or terminal screws on the plug
  - Used only in continuous lengths without splice or tap.
- Prohibit your employees from using wet hands to plug or unplug equipment or extension cords if the equipment is energized.

Note:

Hard service flexible cords No. 12 or larger may be repaired or spliced if the insulation, outer sheath properties, and use characteristics of the cord are retained.

-Continued-

WAC 296-800-28030 (Continued)

You must

(3) Provide the following for temporary use.

- Make sure temporary electrical power and lighting installations that operate at 600 volts or less are used only:
  - During and for remodeling, maintenance, repair or demolition of buildings and similar activities.
  - Experimental or developmental work.
  - For no more than 90 days for:
    - Christmas decorative lighting
    - Carnivals
    - Other similar purposes
- Make sure flexible cords and electrical cords used on a temporary basis are protected from accidental damage.
  - By avoiding sharp corners and projections.
  - If they pass through doorways or other pinchpoints.

Rule

WAC 296-800-28035

Guard electrical equipment to prevent your employees from electrical hazards

You must

(1) Guard live parts of electric equipment operating at 50 volts or more against accidental contact by any of the following means:

- By approved cabinets or other forms of approved enclosures.
- By location in a room, vault, or similar enclosure that is accessible only to employees qualified to work on the equipment. Entrances to rooms and other guarded locations containing exposed live parts must be marked with conspicuous warning signs forbidding unqualified persons to enter.
- By permanent, substantial partitions or screens so that only employees qualified to work on the equipment will have access within reach of the live parts. Any openings must prevent accidental contact with live parts by employees or objects employees carry.
- By location on a balcony, gallery, or platform that will exclude unqualified persons.
- By being located 8 feet or more above the floor or other working surface.

(2) Make sure all electrical appliances, fixtures, lampholders, lamps, rosettes, and receptacles don't have live parts normally exposed to employee contact.

- Rosettes and cleat type lampholders at least 8 feet above the ground may have exposed parts.

-Continued-

WAC 296-800-28035 (Continued)

(3) In locations where electric equipment would be exposed to physical damage, enclosures or guards must be so arranged and of such strength as to prevent such damage.

Live Parts Guarded by Distance

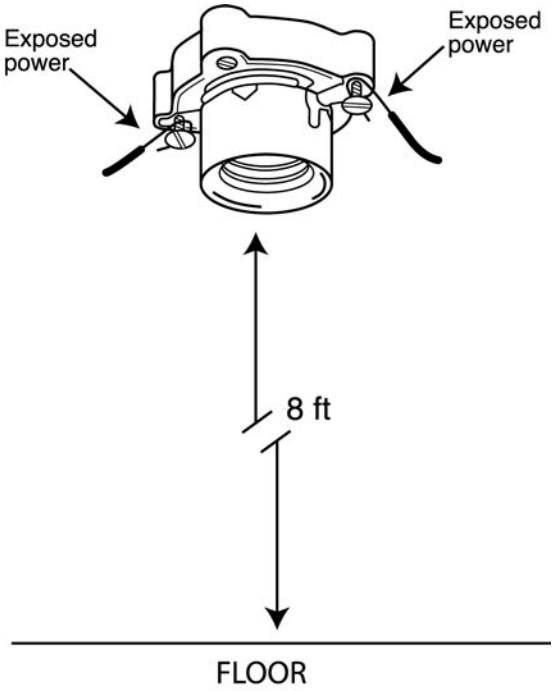

Rule

WAC 296-800-28040

Make sure electrical equipment is effectively grounded

You must

- Make sure the path to ground from circuits, equipment, and enclosures is permanent and continuous.
- Make sure equipment connected by cord and plug is grounded under these conditions:
  - Equipment with exposed noncurrent carrying metal parts
  - Cord and plug connected equipment which may become energized
  - Equipment that operates at over 150 volts to ground
  - Equipment in hazardous locations. (WAC 296-24-95613)

Exemption:

This doesn't apply to guarded motors and metal frames of electrically heated appliances, if the appliance frames are permanently and effectively insulated from ground.

You must

- Ground the following type of equipment:
  - Hand-held motor-operated tools
  - Refrigerators
  - Freezers
  - Air conditioners
  - Clothes washers and dryers
  - Dishwashers
  - Electrical aquarium equipment
  - Hedge clippers
  - Electric lawn mowers

-Continued-

WAC 296-800-28040 (Continued)

- Electric snow blowers
- Wet scrubbers
- Tools likely to be used in damp or wet locations
- Appliances used by employees standing on the ground, on metal floors or working inside of metal tanks or boilers
- Portable hand lamps.

Note:

Grounding can be achieved by: Using tools and appliances equipped with an equipment grounding conductor (3-prong plug and grounded electrical system).

Grounded Plug	Double Insulated
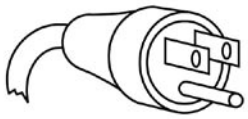	**Double Insulated**
Hand held tools and some other types of equipment must use a 3-wire plug or the tool label must show the tool as insulated by words or symbol.	

You must

- Make sure exposed metal parts of fixed equipment that don't conduct electricity, but may become energized, are grounded if the equipment is in a wet or damp location and isn't isolated.
- Make sure ground wires are identified and look different than the other conductors (wires).

-Continued-

Rule

WAC 296-800-28040 (Continued)

- Make sure grounded conductors aren't attached to any terminal or lead to reverse polarity of the electrical outlet or receptacle. See illustration - Examples of wiring.
- Make sure grounding terminals or grounding-type devices on receptacles, cords, connectors, or attachments plugs aren't used for purposes other than grounding.

WAC 296-800-28040 (Continued)

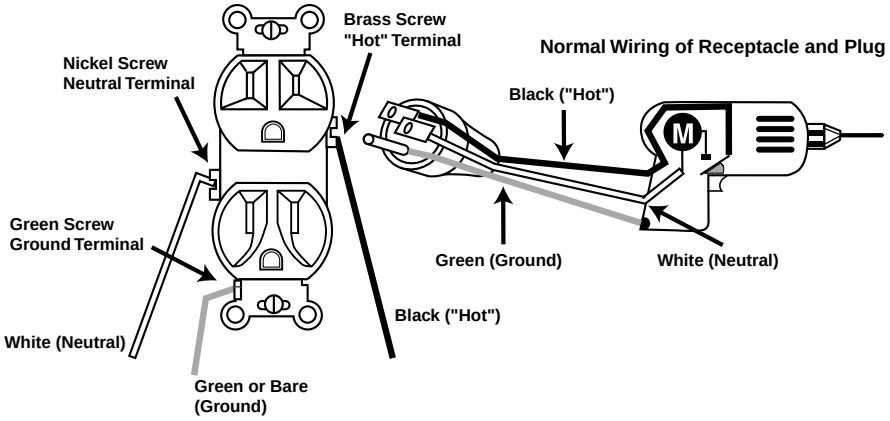

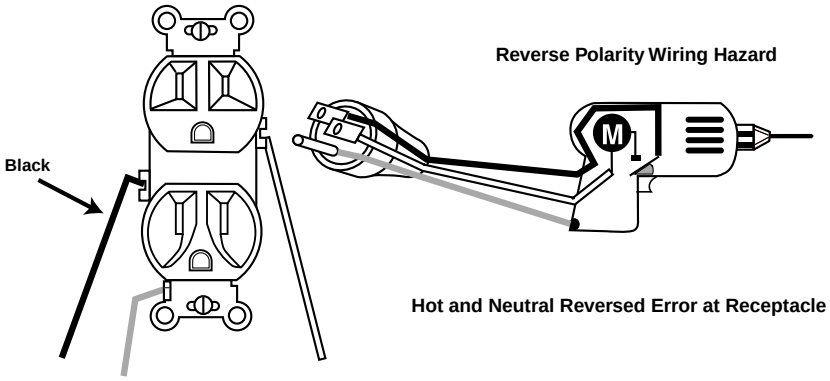

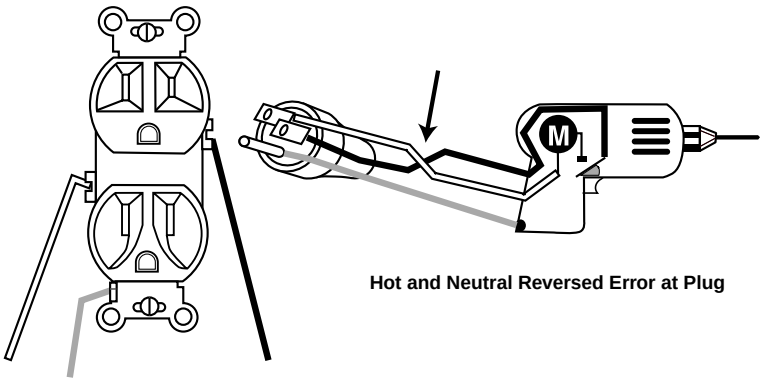

Reverse polarity wiring can cause a fulty tool to start as soon as it is plugged in or or not stop when the switch is released. This could cause an injury. An extremely dangerous type of reverse polarity wiring switches the hot and ground wires. This causes the body of the tool or appliance to be "hot". Touching the tool and conductive surface can result in serious or even deadly shock.

Rule

WAC 296-800-28045

Make sure electrical equipment has overcurrent protection.

You must

- Make sure all electrical circuits that are rated at 600 volts or less have overcurrent protection.
- Protect conductors and equipment according to their ability to safely conduct electrical current.
- Make sure overcurrent devices don't interrupt the continuity of grounded conductors unless all conductors are opened at the same time, except for motor running overload protection.
  - Protect employees from electrical arcing or suddenly moving electrical parts by locating fuses and circuit breakers in safe places. If this isn't possible, install shields on fuses and circuit breakers.
- Make sure the following fuses and thermo cutouts have disconnecting mechanisms:
  - All cartridge fuses accessible to nonqualified persons
  - All fuses on circuits over 150 volts to ground
  - All thermal cutouts on circuits over 150 volts to ground
  - The disconnecting mechanisms must be installed so you can disconnect the fuses or thermal cutouts without disrupting service to equipment and circuits unrelated to those protected by the overcurrent device.

-Continued-

WAC 296-800-28045 (Continued)

- Provide easy access to overcurrent devices for each employee or authorized building management personnel.
- Protect the overcurrent devices by locating them away from easily ignitable material.
  - They must be placed to avoid exposure to physical damage.
- Make sure circuit breakers:
  - Clearly indicate when they are open (off) and closed (on)
  - That operate vertically are installed so the handle is in the “up” position when the breaker is closed (on). See WAC 296-24-95603 (2)(c) for more information
  - Used as switches in 120-volt, fluorescent lighting circuit must be approved for that purpose and marked “SWD.” See WAC 296-24-95603 (2)(c) for more information.
  - That have arcing or suddenly moving parts, are shielded or located so employees won't get burned or injured by the operation of the circuit breaker.
- Make sure fuses that have arcing or suddenly moving parts, are sheilded or located so employees won't get burned or injured by the operation of the fuses.

Notes

Portable Fire Extinguishers

WAC 296-800-300

Summary

Important:

The following WISHA rule applies to the placement, use, maintenance, and testing of portable fire extinguishers provided for the use of employees. Your local fire marshall also enforces fire codes which address fire safety that are more comprehensive and may go beyond WISHA rules.

YOUR RESPONSIBILITY:

To provide readily accessible, appropriate portable fire extinguishers for employees in your workplace

You must

Provide portable fire extinguishers in your workplace
WAC 296-800-30005 ..... Page 300-3

Select and distribute portable fire extinguishers in your workplace
WAC 296-800-30010 ..... Page 300-3

Make sure that portable fire extinguishers are kept fully charged, in operating condition, and left in their designated places
WAC 296-800-30015 ..... Page 300-5

Inspect and test all portable fire extinguishers
WAC 296-800-30020 ..... Page 300-5

Train your employees to use portable fire extinguishers
WAC 296-800-30025 ..... Page 300-9

-Continued-

Summary

WAC 296-800-300 (Continued)

Exemptions:

- You are exempt from the requirements of portable fire extinguishers if you have the following:
  - A written fire safety policy that requires the immediate and total evacuation of employees from the workplace when there is a fire alarm signal

    and
  - An emergency action plan and a fire prevention plan which meet the requirements of WAC 296-24-567

    and
  - Portable fire extinguishers in your workplace that aren't accessible for employee use.
- If another WISHA rule requires portable fire extinguishers, then you must comply with these requirements.
- Where extinguishers are provided but aren't intended for employee use and you have an emergency action plan and a fire prevention plan (which meet the requirements of WAC 296-24-567), then only the requirements of WAC 296-800-30020 apply.

Note:

The introduction has important information about building, electrical and fire codes that may apply to you in addition to WISHA rules. See “How do the WISHA rules relate to building, fire and electrical codes” in the Introduction Section of this book.

WAC 296-800-30005

Provide portable fire extinguishers in your workplace

You must

(1) Provide approved portable fire extinguishers for your workplace and distribute them so they are readily accessible.

- Make sure that your portable fire extinguisher doesn't use extinguishing agents such as carbon tetrachloride or chlorobromomethane extinguishing agents. In addition, soda-acid foam, loaded stream, anti-freeze and water extinguishers of the inverting type shall not be recharged or placed into service.

(2) Mount, locate, and identify portable fire extinguishers so employees can easily reach them, without being subjected to possible injury.

WAC 296-800-30010

Select and distribute portable fire extinguishers in your workplace

Exemption:

- This doesn't apply to the portable fire extinguishers provided for employees to use outside of workplace buildings or structures.
- You are exempt from the distribution requirements of this rule if you have an emergency action plan (that meets requirements of WAC 296-24-567):
  - Which designates certain employees to be the only employees authorized to use the available portable fire extinguishers

    and
  - Requires all other employees in the fire area to immediately evacuate the affected work area upon the sounding of the fire alarm.

-Continued-

Rule

WAC 296-800-30010 (Continued)

You must

- Provide the correct type of portable fire extinguishers and distribute them in your workplace, depending on the type, size, and severity of fire that could occur.
  - The type of portable fire extinguishers you **must** have in your workplace depends on the types of fire hazards that exist in your workplace.

Type of fire hazard	Maximum distance from fire hazard to a fire extinguisher
Wood, cloth, paper, rubber (Class A Fire Hazards)	No more than 75 feet (22.9 m) Note: You may use uniformly spaced standpipe systems or hose stations instead of Class A portable fire extinguishers, if they meet the requirements of WAC 296-24-602 or 296-24-607
Liquids, grease, gases (Class B Fire Hazards)	No more than 50 feet (15.2 m) Note: You may choose to use a smaller fire extinguisher in lieu of that required for the 50 foot distance. If you choose to have the smaller fire extinguisher, the travel distance must not be greater than 30 feet. See UFC Standard 10 Chapter 3 for the basic minimum extinguisher rating allowed.
Live electrical equipment & circuits (Class C Fire Hazards)	Distribute any Class C portable fire extinguishers the same pattern that you have for any Class A or Class B fire hazards. Note: If the electrical equipment is de-energized, you may use a Class A or Class B portable fire extinguisher.
Powder, flakes, & residue from combustible metals, like magnesium & titanium, that build up over a 2-week period (Class D Fire Hazards)	No more than 75 feet (22.9 m)

WAC 296-800-30015

Make sure that portable fire extinguishers are kept fully charged, in operable condition, and left in their designated places

You must

- Make sure that fire extinguishers found with deficiencies are removed from service and replaced with a suitable fire extinguisher.

WAC 296-800-30020

Inspect and test all portable fire extinguishers

You must

- Perform inspections:
  - Make sure that portable fire extinguishers or hose systems (used instead of fire extinguishers) are visually inspected monthly.
- Perform maintenance checks:
  - Make sure that all portable fire extinguishers are subjected to an annual maintenance check.
  - Keep records of all annual maintenance checks and make available to the department upon request.
    - For 1 year after the last maintenance check

      or
    - For the life of the shell, whichever is less.
  - Make sure that equal protection is provided when portable fire extinguishers are removed from service for maintenance and recharging.

-Continued-

Rule

WAC 296-800-30020 (Continued)

Exemption:

Most stored pressure extinguishers don't require an internal examination. Examples of those that do require an internal examination are those containing a loaded stream agent.

You must

- Perform hydrostatic testing:

Exemption:

- Dry chemical extinguishers that have nonrefillable disposable containers are exempt from this requirement.
- Manually pressurized pumptanks are exempt from this requirement.

You must

- Make sure that portable extinguishers are hydrostatically tested
  - At the intervals listed in Table 1, of this section.
  - Whenever they show evidence of corrosion or mechanical injury.
- Not perform hydrostatic testing on fire extinguishers if:
  - The unit has been repaired by soldering, welding, brazing, or use of patching compounds.
  - The cylinder or shell threads are damaged.
  - Corrosion has caused pitting, including corrosion under removable name plate assemblies.
  - The extinguisher has been burned in a fire.
  - Calcium chloride extinguishing agents have been used in a stainless steel shell.

Note:

Specific rules regarding conducting hydrostatic tests are covered in WAC 296-24-59212.

-Continued-

WAC 296-800-30020 (Continued)

You must

- Maintain records showing that hydrostatic testing has been performed. Provide the following evidence to the department upon request:
  - Date of test.
  - Test pressure used.
  - The serial number, or other identifier of the fire extinguisher that was tested.
  - Person or agency performing the test.
- Keep records until:
  - The extinguisher is retested

    or
  - The extinguisher is taken out of service, whichever comes first.
- Empty and maintain stored-pressure dry chemical extinguishers requiring a 12-year hydrostatic test, every 6 years.
  - When recharging or hydrostatic testing is performed, the 6-year requirement begins from that date.

-Continued-

Rule

WAC 296-800-30020 (Continued)

Hydrostatic Test Table

Type of Extinguisher	Test Interval (Years)
Stored pressure water and/or antifreeze	5
Wetting agent	5
Foam (stainless steel shell)	5
Aqueous film forming form (AFFF)	5
Loaded stream	5
Dry chemical with stainless steel	5
Carbon dioxide	5
Dry chemical, stored pressure, with mild steel brazed brass or aluminum shells	12
Halon 1211	12
Halon 1301	12
Dry powder, cartridge or cylinder operated, with mild steel shell	12

Note:

Due to a manufacturers recall, stored pressure water extinguishers with a fiberglass shell (pre-1976) are prohibited from hydrostatic testing.

WAC 296-800-30025

Train your employees to use portable fire extinguishers

You must

- Train your employees where you have provided portable fire extinguishers for their use in:
  - The hazards involved with incipient stage fire fighting (the early stage of a fire when it can be extinguished by a portable fire extinguisher).
  - The general principles of fire extinguisher use.
- Provide the training when they are first hired and then annually.

Helpful Tool:

Training Documentation Form

This sample Training Documentation Form can help you demonstrate in writing that each employee who needs training has received and understood it. You can find a copy of this sample form in the Resource Section of this book.

Notes

Exit Routes and Employee Alarm Systems

WAC 296-800-310

Summary

YOUR RESPONSIBILITY:

To provide and maintain emergency exit routes and to install and maintain adequate employee alarm systems

Exit Routes

You must

Provide an adequate number of exit routes
WAC 296-800-31005 ..... Page 310-3

Make sure that exit routes are large enough
WAC 296-800-31010 ..... Page 310-4

Make sure that exit routes meet their specific design and construction requirements
WAC 296-800-31015 ..... Page 310-5

Make sure that each exit route leads outside
WAC 296-800-31020 ..... Page 310-6

Provide unobstructed access to exit routes
WAC 296-800-31025 ..... Page 310-7

Exit doors must be readily opened from the inside
WAC 296-800-31030 ..... Page 310-7

Use side-hinged doors to connect rooms to exit routes
WAC 296-800-31035 ..... Page 310-8

Provide outdoor exit routes that meet requirements
WAC 296-800-31040 ..... Page 310-8

Minimize danger to employees while they are using emergency exit routes
WAC 296-800-31045 ..... Page 310-9

Mark exits adequately
WAC 296-800-31050 ..... Page 310-9

-Continued-

Exit Routes and Employee Alarm Systems

WAC 296-800-310

Summary

WAC 296-800-310 (Continued)

Provide adequate lighting for exit routes and signs
WAC 296-800-31053 ..... Page 310-10

Maintain the fire retardant properties of paints or other coatings
WAC 296-800-31055 ..... Page 310-10

Maintain emergency safeguards
WAC 296-800-31060 ..... Page 310-11

Maintain exit routes during construction and repair
WAC 296-800-31065 ..... Page 310-11

Provide doors in freezer or refrigerated rooms that open from the inside
WAC 296-800-31067 ..... Page 310-12

Employee Alarm Systems

You must

Install and maintain an appropriate employee alarm system
WAC 296-800-31070 ..... Page 310-12

Establish procedures for sounding emergency alarms
WAC 296-800-31075 ..... Page 310-14

Test the employee alarm system
WAC 296-800-31080 ..... Page 310-15

Exemption:

This rule doesn't apply to vehicles, vessels, or other mobile structures.

Note:

The introduction has important information about building, electrical and fire codes that may apply to you in addition to WISHA rules. See “How do the WISHA rules relate to building, fire, and electrical codes” in the Introduction Section of this book.

EXIT ROUTES

WAC 296-800-31005

Provide an adequate number of exit routes

You must

- Provide a minimum of 2 exit routes to provide different ways for employees to leave the workplace safely during an emergency (at least 2 of the exit routes must be remote from one another so employees can safely exit if one exit route becomes blocked or unavailable).
- Provide an adequate number (at least 2) of exit routes, considering the kind, number, location and capacity, appropriate to each building according to the following conditions:
  - Number of employees
  - Size of building
  - Arrangement of workplace
  - Building occupancy

Note:

A single exit route is permitted where the number of employees, the size of the building, its occupancy, or the arrangement of the workplace indicates that a single exit will allow all employees to exit safely during an emergency. Other means of escape, such as fire exits or accessible windows, should be available where only one exit route is provided.

Rule

WAC 296-800-31010

Make sure that exit routes are large enough

You must

- Make sure each exit route is large enough to accommodate the maximum-permitted occupant load for each floor served by the route.
- Make sure the capacity of an exit route doesn't decrease at any point.
- Make sure an exit route is at least 6 feet 8 inches high at all points.
  - Make sure objects that stick out into the exit route, such as fans hanging from the ceilings or cabinets on walls, don't reduce the minimum height and width of the exit route.
- Make sure exit routes are at least 28 inches wide at all points between any handrails.
  - If necessary, routes must be wider than 28 inches to accommodate the expected occupant load.

Rule

WAC 296-800-31015

Make sure that exit routes meet their specific design and construction requirements

You must

- Make sure each exit is a permanent part of the workplace.
- Make sure an exit route has only those openings necessary to permit access to, or exit from, occupied areas of the workplace.
- Make sure any opening into an exit through a fire wall is protected by a self-closing fire door that remains closed.
- Make sure each fire door, its frame, and its hardware is listed or approved by a nationally recognized testing laboratory.
- Make sure construction materials, used to separate an exit route, have at least:
  - One-hour fire resistance rating if the exit connects 3 stories or less.
  - 2-hour fire resistance rating if the exit connects 4 stories or more.
- Make sure employees are provided with stairs or a ramp, if the exit route isn't substantially level.

Exit Routes and Employee Alarm Systems

WAC 296-800-310

Rule

WAC 296-800-31020

Make sure that each exit route leads outside

You must

- Make sure that building exit routes lead:
  - Directly outside or to a street, walkway;

    or
  - To an open space with access to the outside.
  - To streets, walkways, or open spaces large enough to accommodate all building occupants likely to use the exit.
- Make sure the exit routes clearly show the route employees use to leave the building in an emergency.
- Install a standard safeguard with a warning sign, if a doorway or corner of a building could allow an employee to walk in front of an engine or trolley.
- Use doors, partitions, or other effective means to show employees the correct route out of the building, if the stairs in your exit route lead anywhere but out of the building.

Note:

If the stairs in your exit route lead past the exit to the basement, you might install a gate at the point they lead towards that basement. The gate could help your employees stay on the exit route taking them out of the building.

Rule

WAC 296-800-31025

Provide unobstructed access to exit routes

You must

(1) Provide exit routes that are always free of obstructions so all employees can safely exit the building during an emergency.

(2) Make sure employees aren't required to travel to a dead end or through a room that can be locked, such as a restroom.

WAC 296-800-31030

Exit doors must be readily opened from the inside

Exemption:

An exit door may be locked or blocked from the inside in a mental, penal, or correctional institution, if supervisory personnel are continuously on duty and a plan exists to remove employees and inmates during an emergency.

You must

- Make sure all exit doors readily open from the inside without keys, tools, or special knowledge. A device that locks only from the outside, such as a panic bar, is permitted. An exit door must be free of any device or alarm that could restrict emergency use of an exit if the device or alarm fails.

Rule

WAC 296-800-31035

Use side-hinged doors to connect rooms to exit routes

You must

- Use a side-hinged exit door to connect any room to an exit route. The door must swing out when the room:
  - Is occupied by more than 50 persons

    or
  - Contains highly flammable or explosive materials.

WAC 296-800-31040

Provide outdoor exit routes that meet these requirements

You must

- Make sure an outdoor exit route (such as an interior balcony, porch, gallery, or roof) meets all requirements for an indoor exit route. In addition, an outdoor exit route must also:
  - Have guardrails to protect unenclosed sides.
  - Be covered if snow or ice is likely to accumulate without regular removal.
  - Be reasonably straight with smooth, solid, substantially level floors.
  - Have no dead ends more than 20 feet long that branch off of the exit route.

Rule

WAC 296-800-31045

Minimize danger to employees while they are using emergency exit routes

You must

- Maintain each exit route to minimize danger to employees during an emergency.
- Keep each exit route free of explosive or highly flammable furnishings and decorations.
- Not require employees to travel toward areas where high hazard materials are stored, unless the route is protected by partitions or physical barriers. High hazard materials are materials that:
  - Burn quickly
  - Emit poisonous fumes when burned
  - Are explosive

WAC 296-800-31050

Mark exits adequately

You must

- Mark each exit with a clearly visible, distinctive sign reading “EXIT.”
- Make sure the letters in the word "EXIT" are at least six inches high an 3/4 inch wide.
- Mark any doorway or passage that might be mistaken for an exit with “NOT AN EXIT” or with an indication of its actual use.
- Make sure exit signs are a distinctive color.
- Make sure signs are posted and arranged along exit routes to adequately show how to get to the nearest exit and clearly indicate the direction of travel.
- Not obstruct or conceal exit signs in any way.
- Keep exit doors free of signs or decorations that obscure their visibility.

Rule

WAC 296-800-31053

Provide adequate lighting for exit routes and signs

You must

- Illuminate each exit route adequately and reliably.
- Have at least 5 foot-candles illumination from a reliable light source.
- Make sure any exit signs illuminated by artificial lights and made of translucent material (other than internally illuminated types).
  - Have screens, discs or lens of at least 25 square inches in size

    and
  - Show red or other designated color on the approach side of the exit.
- Make sure brightly lit signs, displays, or objects in or near the line of vision don't distract attention from the exit sign.
- Make sure exit signs that are self-lighting have a minimum luminance surface value of .06 footlamberts.

WAC 296-800-31055

Maintain the fire retardant properties of paints or other coatings

You must

- Maintain any paints or other coatings with fire retardant properties so they retain their fire retardant properties.

WAC 296-800-31060

Maintain emergency safeguards

You must

- Maintain each safeguard in proper working order to protect employees during an emergency. Emergency safeguards include items such as:
  - Sprinkler systems
  - Alarm systems
  - Fire doors
  - Exit lighting.

WAC 296-800-31065

Maintain exit routes during construction and repair

You must

- Have enough exit routes that comply with these rules before letting your employees occupy a workplace under new construction.
- Make sure that employees don't occupy an existing workplace unless:
  - All exits and existing fire protection are maintained

    or
  - Alternate fire protection is provided that ensures an equivalent level of safety.
- Make sure that flammable or explosive materials used during construction or repair don't expose employees to additional hazards or prevent emergency escape.

Rule

WAC 296-800-31067

Provide doors in freezer or refrigerated rooms that open from the inside

You must

- Make sure that walk-in refrigerators or freezer rooms have doors with opening devices allowing them to be opened from the inside even when they are locked from the outside.

EMPLOYEE ALARM SYSTEMS

WAC 296-800-31070

Install and maintain an appropriate employee alarm system

Exemptions:

- If you have 10 or fewer employees in a particular workplace, you can use direct voice communication to sound the alarm, if all employees can hear it. For this kind of workplace, you don't need a back-up system.
- In workplaces where employees wouldn't otherwise be able to recognize audible or visible alarms, you can use tactile devices to alert them.

You must

- Make sure that a working employee alarm system with a distinctive signal to warn employees of fire or other emergencies is installed and maintained, unless employees can see or smell a fire or other hazard.

-Continued-

WAC 296-800-31070 (Continued)

- Make sure that the following systems meet the requirements of this rule, if you use them as your employee alarm system:
  - Supervisory alarms.
  - Discharge alarms.
  - Detection systems required on fixed extinguishing systems.
  - Detection systems required on fire suppression systems.
- Make sure that your employee alarm systems are:
  - Providing enough warning to allow employees to safely escape from the workplace, the immediate work area, or both.
  - Noticeable above surrounding noise or light levels by all employees in the affected portions of the workplace.
  - Distinctive and recognizable as a signal, to evacuate the work area.
  - Restored to working order as soon as possible, after each test or alarm.
  - Supervised, if installed after July 1, 1982, and if it has that capacity.
  - Able to alert assigned personnel whenever a malfunction exists in the system.
  - Adequately warning employees of emergencies.
  - Serviced, maintained, and tested by a person trained in the alarm system's design and functions to keep the system operating reliably and safely.
  - In working order, except when undergoing repairs or maintenance.
  - Warning employees of fire or other emergencies with a distinctive signal, if they aren't able to see or smell a fire or other hazard.
  - Manual actuation devices that, if provided, are unobstructed, easy to find, and readily accessible.
  - Using alarm devices, components, combinations of devices, or systems with approved construction and installation. This applies to steam whistles, air horns, strobe lights, or similar lighting devices, as well as tactile devices.

-Continued-

Rule

WAC 296-800-31070 (Continued)

- Supplied with spare alarm devices available to restore the system promptly if a component breaks, is worn, or destroyed.
- Kept in full operating condition by maintaining and replacing power supplies as often as necessary.
- Supplied with a back-up means of alarm, such as employee runners or telephones, when regular systems are out of service.

WAC 296-800-31075

Establish procedures for sounding emergency alarms

You must

- Explain to each employee how to sound the alert for emergencies. Methods of reporting emergencies can include:
  - Manual pull box alarms
  - Public address systems
  - Radio
  - Telephones.
- Post emergency numbers near telephones, employee notice boards, or other conspicuous locations, if you use telephones to report emergencies.
- Require that all emergency messages have priority over all nonemergency messages if the communication system also serves as an employee alarm system.

Rule

WAC 296-800-31080

Test the employee alarm system

You must

- Test the reliability and adequacy of your employee alarm system every 2 months.
  - Use a different activation device in each test of a multiactuation device system, so the entire alarm system gets tested.
- Make sure that supervised (monitored) employee alarm systems are tested at least once a year for reliability and adequacy.

Notes

Accident Reporting & Investigating

WAC 296-800-320

Summary

YOUR RESPONSIBILITY:

To report and conduct an investigation of certain types of accidents

You must

Report the death, probable death of any employee, or the in-patient hospitalization of 2 or more employees within 8 hours
WAC 296-800-32005 ..... Page 320-2

Make sure that any equipment involved in an accident isn't moved
WAC 296-800-32010 ..... Page 320-3

Assign people to assist the Department of Labor and Industries
WAC 296-800-32015 ..... Page 320-4

Conduct a preliminary investigation for all serious injuries
WAC 296-800-32020 ..... Page 320-5

Document the investigation findings
WAC 296-800-32025 ..... Page 320-6

Note:

Call the nearest office of the Department of Labor and Industries at 1-800-4BE SAFE or call Occupational Safety and Health Administration (OSHA) at 1-800-321-6742, to report the death, probable death of any employee or the in-patient hospitalization of 2 or more employees within 8 hours, after handling medical emergencies.

Accident Reporting & Investigating

WAC 296-800-320

Rule

WAC 296-800-32005

Report the death, probable death of any employee, or the in-patient hospitalization of 2 or more employees within 8 hours

You must

- Contact the nearest office of the Department of Labor and Industries in person or by phone at 1-800-4BE SAFE to report within 8 hours of the work-related incident or accident:
  - A death
  - A probable death
  - 2 or more employees are admitted to the hospital

    or
  - Contact the Occupational Safety and Health Administration (OSHA) by calling its central number at 1-800-321-6742.
- Provide the following information within 30 days concerning any accident involving a fatality or hospitalization of 2 or more employees:
  - Name of the work place
  - Location of the incident
  - Time and date of the incident
  - Number of fatalities or hospitalized employees
  - Contact person
  - Phone number
  - Brief description of the incident.

Note:

If you don't learn about the incident at the time it occurs, you must report the incident within 8 hours of the time it was reported to you, your agent, or employee.

WAC 296-800-32010

Make sure that any equipment involved in an accident isn't moved

You must

- Not move equipment involved in a work or work related accident or incident if any of the following results:
  - A death
  - A probable death
  - 2 or more employees are sent to the hospital.
- Not move the equipment until a representative of the Department of Labor and Industries investigates the incident and releases the equipment unless:
  - Moving the equipment is necessary to:
    - Remove any victims.
    - Prevent further incidents and injuries.

Helpful Tool:

Accident/Incident Table

The Accident/Incident table can help you in the event of an accident or incident. You can find a copy of this table in the Resource Section of this book.

Accident Reporting & Investigating

WAC 296-800-320

Rule

WAC 296-800-32015

Assign people to assist the Department of Labor and Industries

You must

- Assign witnesses and other employees to assist Department of Labor and Industries personnel who arrive at the scene to investigate the incident involving:
  - A death
  - Probable death
  - 2 or more employees are sent to the hospital.

    Include:
  - The immediate supervisor
  - Employees who were witnesses to the incident
  - Other employees the investigator feels are necessary to complete the investigation.

WAC 296-800-32020

Conduct a preliminary investigation for all serious injuries

You must

- Make sure your preliminary investigation is conducted to evaluate the facts relating to the cause of the incident by the following people:
  - A person designated by the employer.
  - The immediate supervisor of the injured employee.
  - Witnesses.
  - An employee representative, such as a shop steward or other person chosen by the employees to represent them.
  - Any other person who has the experience and skills.
- If the employee representative is the business agent of the employee bargaining unit and is unavailable to participate without delaying the investigation group, you may proceed, by using one of the following:
  - The shop steward.
  - An employee representative member of your safety committee.
  - A person selected by all employees to represent them.

Note:

A preliminary investigation includes noting information such as the following:

- Where did the accident or incident occur?
- What time did it occur?
- What people were present?
- What was the employee doing at the time of the accident or incident?
- What happened during the accident or incident?

Accident Reporting & Investigating

WAC 296-800-320

Rule

WAC 296-800-32025

Document the preliminary investigation findings

You must

- Document the preliminary investigation findings for use at any formal investigation.

Helpful Tool:

Accident Investigation Report

The Accident Investigation Report can help you report and investigate workplace accidents. You can find a sample copy of the report in the Resource Section of this book.

Releasing Accident Investigation Reports

WAC 296-800-330

Rule

The Department must

- Keep accident investigations and related reports confidential.
- Not freely release results of accident investigations and related reports that are confidential.
- Make available accident investigation reports, without the need of a court order, only to the following:
  - Injured workers, their legal representatives, or their labor organization representatives.
  - The legal representative or labor organization representative of a deceased worker.
  - The employer of any injured or deceased worker.
  - Any other employer or person whose actions or business operations are the subject of the report or investigation.
  - Any attorney representing a party in any pending legal action in which an investigative report constitutes material and relevant evidence.
  - Employees of governmental agencies in the performance of their official duties.
  - Any beneficiary of a deceased worker actually receiving benefits under the terms of Title 51 RCW, the Industrial Insurance Act.

Note:

The records officer may provide accident investigation reports to the closest surviving member of the deceased worker's immediate family.

Notes

Protecting the Identity of the Source of Confidential Information

WAC 296-800-340

Summary/Contents/Rules

The Department must

- Not reveal the source of information when a promise has been made to keep the identity of the source confidential.
- Not disclose information that would reveal the source's identity, whenever a department file contains an investigative report or information from a source under a promise of confidentiality.
  - The contents of an investigative report may be withheld only to the extent necessary to conceal the identity of the source.
  - When information is withheld, the records officer must give a general characterization of the information withheld, but must not reveal the identity of the information's source.

Notes

WISHA Appeals, Penalties, & Other Procedural Rules

WAC 296-800-350

Summary

Introduction:

This section describes actions WISHA takes during or after inspections, and your related obligation and rights.

YOUR REPSONSIBILITY:

You must follow posting requirements and notify your employees of the information listed in these rules, as indicated.

You must

WISHA Inspections and Citations

Types of workplace inspections
WAC 296-800-35002 ..... Page 350-6

Scheduling inspections
WAC 296-800-35004 ..... Page 350-7

Inspection techniques
WAC 296-800-35006 ..... Page 350-8

Response to complaints submitted by employees or their representatives
WAC 296-800-35008 ..... Page 350-8

Citations mailed after an inspection
WAC 296-800-35010 ..... Page 350-9

Employees (or their representatives) can request a Citation and Notice
WAC 296-800-35012 ..... Page 350-10

Posting a citation and notice and employee complaint information
WAC 296-800-35016 ..... Page 350-11

-Continued-

WISHA Appeals, Penalties, & Other Procedural Rules

WAC 296-800-350

Summary

WAC 296-800-350 (Continued)

Civil Penalties for Violating WISHA Requirements

Reasons to assess civil penalties
WAC 296-800-35018 ..... Page 350-11

Minimum penalties
WAC 296-800-35020 ..... Page 350-12

How Civil Penalties are Calculated

Base penalty calculations - severity and probability
WAC 296-800-35022 ..... Page 350-12

Severity rate determination
WAC 296-800-35024 ..... Page 350-12

Probability rate determination
WAC 296-800-35026 ..... Page 350-14

Determining the gravity of a violation
WAC 296-800-35028 ..... Page 350-15

Base penalty adjustments
WAC 296-800-35030 ..... Page 350-16

Types of base penalty adjustments
WAC 296-800-35032 ..... Page 350-16

Minimum and maximum adjusted base penalty amount
WAC 296-800-35038 ..... Page 350-17

Reasons for increasing civil penalty amounts
WAC 296-800-35040 ..... Page 350-18

-Continued-

Summary

WAC 296-800-350 (Continued)

Certify that Violations have been Abated

Employers must certify that violations have been abated
WAC 296-800-35042 ..... Page 350-20

For willful, repeated, or serious violations, submit additional documentation
WAC 296-800-35044 ..... Page 350-21

Submitting correction action plans
WAC 296-800-35046 ..... Page 350-21

Submit progress reports to the Department, when required
WAC 296-800-35048 ..... Page 350-22

WISHA determines the date by which abatement documents must be submitted
WAC 296-800-35049 ..... Page 350-23

Inform affected employees and their representatives of abatement actions you have taken
WAC 296-800-35050 ..... Page 350-23

Tag cited moveable equipment to warn employees of a hazard
WAC 296-800-35052 ..... Page 350-24

-Continued-

WISHA Appeals, Penalties, & Other Procedural Rules

WAC 296-800-350

Summary

WAC 296-800-350 (Continued)

Requesting More Time to Comply

You can request more time to comply
WAC 296-800-35056 ..... Page 350-26

WISHA's response to your request for more time
WAC 296-800-35062 ..... Page 350-28

Post the Department's response
WAC 296-800-35063 ..... Page 350-28

A hearing can be requested about the Department's response
WAC 296-800-35064 ..... Page 350-29

Post the Department's hearing notice
WAC 296-800-35065 ..... Page 350-30

Hearing procedures
WAC 296-800-35066 ..... Page 350-30

Post the hearing decision
WAC 296-800-35072 ..... Page 350-31

Requesting an Appeal of WISHA Citations and Corrective Notices

Employers and employees can request an appeal of a Citation and Notice
WAC 296-800-35076 ..... Page 350-31

Await the Department's response to your appeal request
WAC 296-800-35078 ..... Page 350-33

-Continued-

Summary

WAC 296-800-350 (Continued)

Department actions when reassuming jurisdiction over an appeal
WAC 296-800-35080 ..... Page 350-34

Appealing a corrective notice
WAC 296-800-35082 ..... Page 350-34

Notify employees
WAC 296-800-35084 ..... Page 350-35

WISHA Appeals, Penalties, & Other Procedural Rules

WAC 296-800-350

Rule

WISHA Inspection and Citations

WAC 296-800-35002

Types of workplace inspections

- WISHA conducts the following types of inspections:
  - Programmed inspections of hazardous workplaces.

    WISHA identifies hazardous workplaces using objective criteria and inspection-scheduling systems that may look at any of the following factors:
    - Type of industry
    - Available data of injuries and illnesses where an inspection might eliminate the hazards causing them
    - Employer's industrial insurance experience
    - Number, type, and toxicity of contaminants in the workplace
    - Degree of exposure to hazards
    - Number of employees exposed
    - Other factors, such as history of employee complaints.

    WISHA periodically reviews the scheduling systems and may adjust the factors used and/or the weight given to each factor
  - Routine programmed inspections in the following high hazard industries:
    - Agriculture
    - Asbestos renovation and demolition
    - Construction
    - Electrical utilities and communications
    - Logging
    - Maritime.

-Continued-

WAC 296-800-35002 (Continued)

- Unprogrammed inspections of workplaces that may be in violation of WISHA safety or health rules or Chapter 49.17 RCW, the Washington Industrial Safety and Health Act. Unprogrammed inspections may result because of:
  - Complaints from employees, former employees, or employee representatives who believe they have been exposed to a hazard because of a violation.
  - Referrals from anyone who reasonably believes that workers under WISHA jurisdiction are being or have been exposed to a hazard because of a violation.
- Workplace deaths and serious injuries or illnesses investigations to determine if they were caused by a violation of safety and health rules or chapter 49.17 RCW, the Washington Industrial Safety and Health Act. WISHA may also initiate comprehensive inspections based on such investigations.
- Imminent danger of serious injury or death inspections when there is a reason to believe that employees may be in imminent danger of serious injury or death.
- Follow-up inspections at later dates to verify that you have corrected any hazards identified in a citation.

WAC 296-800-35004

Scheduling inspections

- WISHA distributes staff performing inspections as efficiently as possible to ensure maximum protection for workers.

WISHA Appeals, Penalties, & Other Procedural Rules

WAC 296-800-350

Rule

WAC 296-800-35006

Inspection techniques

- During an inspection, WISHA staff may:
  - Take samples, photographs, videotapes, or audiotapes
  - Conduct tests
  - Ask employees to wear sampling devices
  - Conduct interviews
  - Privately question, on or off the worksite, any:
    - Employer
    - Employer representative
    - Owner
    - Operator
    - Employee
    - Employee representative.
  - Employ any other reasonable investigative techniques.

WAC 296-800-35008

Response to complaints submitted by employees or their representatives

- When an employee or their representative has filed a complaint, WISHA will:
  - Remove the name of the person submitting the complaint and the names of any employees identified in the complaint before giving a copy of the complaint to an employer, unless the person filing the complaint gives WISHA written permission to release the names involved.
  - Give a copy of the Citation and Notice to the employee (or their representative) who submitted the complaint, or explain to them why an inspection wasn't conducted.

-Continued-

WAC 296-800-35008 (Continued)

- Review any department decision refusing to inspect or cite violations alleged in a complaint, if requested in writing.
- Notify the person in writing of the review results. If the person requesting the review isn't satisfied with the results, they may request a second review by the Department.

WAC 296-800-35010

Citations mailed after an inspection

- After an inspection or an investigation, WISHA will mail a citation to you within 6 months following the inspection or investigation.
- The citation will include:
  - A description of any violations found
  - The amount and type of assessed penalties
  - The length of time given to correct the violations.
- If no violations are found, WISHA will normally send you a Citation and Notice indicating that no violations were found.

Note:

- Copies of WISHA safety and health inspection reports can be requested. The request should be mailed to:

  DEPARTMENT OF LABOR AND INDUSTRIES
  PUBLIC DISCLOSURE UNIT
  P.O. BOX 44632
  OLYMPIA WA 98504-4632

- You can also contact your local Labor and Industries field office for information on requesting copies of inspection reports (see the Resource Section of this book).

WISHA Appeals, Penalties, & Other Procedural Rules

WAC 296-800-350

Rule

WAC 296-800-35012

Employees (or their representatives) can request a Citation and Notice

- Employees or their representatives may request copies of Citation and Notices issued to the employer.
  - Complete the Request for Copy of Citation and Notice form, and mail it to:

    DEPARTMENT OF LABOR AND INDUSTRIES

    STANDARDS AND INFORMATION

    P.O. BOX 44638

    OLYMPIA WA 98504-4638

Note:

- To obtain a copy of the Request for Copy of Citation and Notice form, call 360-902-5534, or contact your local Labor and Industries office (see the Resource Section for a complete list of the offices.)
- If you submit this form, you'll receive all Citation and Notices issued to that employer for the next 12 months.
  - When the Department approves the request for a copy of a Citation and Notice, WISHA will indicate the date the application is approved, and the date it expires. Once approved, your application is valid for one year. Once expired, a one-year extension may be requested.
  - You can waive the one-year period when you make your initial request.
  - If more than one employee representative requests a copy of the same Citation and Notice, the Department may decide which person will receive the copy of the Citation and Notice.
- The Department can deny requests for copies of Citation and Notices if the person filing the request isn't an employee representative.

WISHA Appeals, Penalties, & Other Procedural Rules

WAC 296-800-350

Rule

WAC 296-800-35016

Posting a Citation and Notice and employee complaint information

You must

- Immediately notify your employees of a citation and notice by posting them and/or any correspondence related to an employee complaint on the safety bulletin board for 3 working days, or until all violations have been corrected, whichever is longer.
- Use any other appropriate means to notify employees who can't receive notices posted on the safety bulletin board; for example, a copy to authorized employee representatives or the safety committee, or copies sent electronically.

Civil Penalties for Violating WISHA Requirements
WAC 296-800-35018

Reasons to assess civil penalties

- WISHA may assess civil penalties when a citation and notice is issued for any violation of health and safety rules, or statutes found during an inspection.
- WISHA will assess civil penalties:
  - When a citation for a serious violation is issued.
  - Under other circumstances specified by statute (such as RCW 49.17.180, 49.26.016, 49.17.177, 49.70.190).
- Civil penalties promote compliance, encouraging employers to correct violations before an inspection takes place and avoiding the risk of receiving a penalty assessment. Civil penalties help promote a level playing field for employers complying with the rules by assessing penalties for those who don't comply.

WISHA Appeals, Penalties, & Other Procedural Rules

WAC 296-800-350

Rule

WAC 296-800-35020

Minimum penalties

- The minimum penalty amounts assessed by WISHA are:
  - $100 for any penalty
  - $5,000 per violation for all willful violations.

How Civil Penalties are Calculated
WAC 296-800-35022

Base penalty calculations-severity and probability

- Except for specific penalty amounts that are dictated by statute, WISHA calculates the base civil penalty for a violation by evaluating:
  - The severity of the injury, illness, or disease that could result from the alleged hazard.
  - The probability that an injury, illness, or disease could occur as a result of the alleged hazard.

WAC 296-800-35024

Severity rate determination

- Severity describes how serious an injury, illness, or disease might be because of a hazardous condition. Severity ratings are based on the most serious injury, illness, or disease that could be reasonably expected to occur because of a hazardous condition (see Table 1).
- Severity ratings are expressed in whole numbers and range from 1 (lowest) to 6 (highest). A violation with a severity rating of 4, 5, or 6 is considered to be a serious violation.

-Continued-

WAC 296-800-35024 (Continued)

TABLE 1: SEVERITY RATINGS

Severity	Most serious injury, illness, or disease likely to result in:
6	Death from injury, illness or disease; injuries involving permanent severe disability; chronic, irreversible illness.
5	Permanent disability of a limited or less severe nature, injuries or reversible illnesses resulting in hospitalization.
4	Injuries or temporary, reversible illnesses resulting in serious physical harm (but less than 5 or 6 above) and may require removal from exposure or supportive treatment without hospitalization for recovery.
3	Injuries or illness would probably not cause death or serious physical harm, but violations have at least major impact and an indirect relationship to serious injury, illness or disease. Violations could have direct and immediate realtionship to safety and health of employees. No need for medical treatment beyond first aid.
2	Nonserious or general violations of minor impact, including violations that have an indirect relationship to nonserious injury, illness or disease. No injury, illness or disease without additional violations.
1	No injury, and not likely to result in injury in the presence of other violations.

WISHA Appeals, Penalties, & Other Procedural Rules

WAC 296-800-350

Rule

WAC 296-800-35026

Probability rate determination

- Probability refers to the likelihood of an injury, illness or disease occurring, and is expressed in whole numbers ranging from 1 (lowest) to 6 (highest). Probability doesn't change severity.
- When determining probability, WISHA considers the number of employees affected and other factors, depending on the situation. Other factors may include:
  - Frequency of employee exposure.
  - Instances (number of times the same violation occurs in the workplace).
  - How close an employee is to the hazard.
  - Weather and other working conditions.
  - Employee skill level.
  - Employee awareness of the hazard.
  - The pace, speed, and nature of the task or work.
  - Use of personal protective equipment.
  - Amount of exposure (for health violations).
  - Other mitigating or contributing circumstances.

WAC 296-800-35028

Determining the gravity of a violation

- WISHA calculates most base penalties by assigning a weight to a violation. This weight is called "gravity." Gravity is calculated by multiplying a violation's severity by its probability. Expressed as a formula, gravity is: Gravity = Severity x Probability.
- Unless a particular rule establishes penalty amounts for specific violations, WISHA uses Table 2 to determine the dollar amount for each base penalty.

Table 2: Penalty Amount Using Gravity

Gravity	Base Penalty
1	$100
2	$200
3	$300
4	$400
5	$500
6	$1000
8	$1500
9	$2000
10	$2500
12	$3000
15	$3500
16	$4000
18	$4500
20	$5000
24	$5500
25	$6000
30	$6500
36	$7000

WISHA Appeals, Penalties, & Other Procedural Rules

WAC 296-800-350

Rule

WAC 296-800-35030

Base penalty adjustments

- WISHA may adjust an employer's base penalty amount because of the good faith effort, size, and compliance history. No adjustments are made to penalty amounts specified by statute.

WAC 296-800-35032

Types of base penalty adjustments

Employer's Good Faith

- An employer's good faith effort (or lack of) may justify increasing or decreasing a base penalty. No single factor determines good faith. Good faith is a reflection of an employer's:
  - Effort before an inspection to provide a safe and healthful workplace for employees.
  - Effort to comply with a standard they have violated.
  - Cooperation during an inspection that is measured by a desire to comply with the cited standard and immediately correct identified hazards.
- WISHA uses Table 3 to adjust base penalty amounts because of good faith effort.

TABLE 3: GOOD FAITH ADJUSTMENTS

Good Faith Rating	Adjustment to Base Penalty
Excellent	35% reduction
Good	20% reduction
Average	No adjustment
Poor	20% increase

-Continued-

WAC 296-800-35032 (Continued)

Employer's Work Force Size

- WISHA may adjust base penalties due to the size of an employer's work force in the State of Washington by using Table 4.

TABLE 4: SIZE ADJUSTMENTS	
Number of Employees	**Adjustment to Base Penalty**
1-25	60% reduction
26-100	40% reduction
101-250	20% reduction
More than 250	No adjustment

Employer's Compliance History

- WISHA may adjust a base penalty based on an employer's history of safety and health violations in the State of Washington, using previous citations as well as injury and illness rates (see Table 5).

TABLE 5: HISTORY ADJUSTMENTS	
History Rating	**Adjustment to Base Penalty**
Good	10% reduction
Average	No adjustment
Poor	10% increase

WAC 296-800-35038

Minimum and maximum adjusted base penalty amounts

- The maximum penalty for a violation other than repeat, willful, egregious or failure-to-abate is $7,000.
- The minimum adjusted base penalty for any violation carrying a penalty is $100.00.

WISHA Appeals, Penalties, & Other Procedural Rules

WAC 296-800-350

Rule

WAC 296-800-35040

Reasons for increasing civil penalty amounts

- WISHA may **increase** civil penalties by applying a multiplier to an adjusted base penalty. Multipliers may be applied for the following reasons:
  - Repeat Violations:

    A violation is a repeat violation if the employer has been cited one or more times previously for a substantially similar hazard:
    - WISHA cites such violations if the final order for the previous citation was dated no more than three years prior to the employer committing the violation being cited.
    - The adjusted base penalty will be multiplied by the total number of citations with violations involving similar hazards, including the current inspection.
    - The maximum penalty can't exceed $70,000 for each violation.
  - Willful Violations:

    A willful violation is a voluntary action done either with an intentional disregard of, or plain indifference to, the requirements of the applicable WISHA rule(s):
    - For all willful violations, the adjusted base penalty will be multiplied by 10.
    - All willful violations will receive at least the statutory minimum penalty of $5,000.
    - The maximum penalty can't exceed $70,000 for each violation.

      For example: When management is aware that employees are resistant to following specific WAC rule(s); employee resistance results in imminent danger situation or a serious violation; and management fails to make efforts that are effective in practice to overcome the resistance, then WISHA will presume that the failure constitutes voluntary action.

-Continued-

WAC 296-800-35040 (Continued)

- Egregious Violations:

  An egregious violation may be issued for exceptionally flagrant cases involving willful violations. In these cases, WISHA will issue a separate penalty for each instance of an employer failing to comply with a particular rule.

- Failure-to-Abate Violations:

  A failure-to-abate violation occurs when an employer who has been cited for a WISHA violation, fails to correct the violation on time (certifying corrected violations is covered in WAC 296-800-35042 through 296-800-35052).

  - Based on the facts at the time of reinspection, WISHA will:
    - Multiply the adjusted base penalty by a factor of at least 5, but up to 10, based on the employer's effort to comply.
    - Multiply the adjusted base penalty by the number of calendar days past the correction date.
    - The maximum penalty can't exceed $7,000 per day for every day the violation is not corrected

WISHA Appeals, Penalties, & Other Procedural Rules

WAC 296-800-350

Rule

Certify that Violations have been Abated

WAC 296-800-35042

Employers must certify that violations have been abated

You must

- Certify within 10 calendar days following the correction date that you have abated each violation, unless the compliance officer indicates in your citation and notice that you have corrected the violations. Include the following:
  - Your name and address.
  - The inspection number your written statement applies to.
  - The citation and item numbers your written statement applies to.
  - The date and method you used to abate each violation.
  - That you informed your affected employees and their representatives that each violation was corrected.
  - That the information you submitted is accurate.
  - Your signature or the signature of your authorized representative.

WAC 296-800-35044

For willful, repeated, or serious violations, submit additional documentation

You must

- Submit additional documentation for each willful or repeated violation supporting that abatement is completed. This documentation may include, but isn't limited to:
  - Evidence of the purchase, or repair, of equipment.
  - Photographic or video evidence of corrections.
  - Other written records.
- Submit additional documentation for a serious violation, when required by the citation and notice.

WAC 296-800-35046

Submitting correction action plans

You must

- Submit a correction action plan within 25 calendar days from the final order date if the Citation and Notice requires it. Your plan must:
  - Identify the violation
  - List the steps you will take to correct the violation.
  - Include a schedule to complete the steps.
  - Describe how employees will be protected until the corrections are completed.

-Continued-

WISHA Appeals, Penalties, & Other Procedural Rules

WAC 296-800-350

Rule

WAC 296-800-35046 (Continued)

Note:

- The Department will notify you in writing if there is anything inadequate about your plan and will work out the problems.
- When determining if required documents are submitted on time, the Department looks at the postmark date for documents sent by standard mail and the date received by other means, such as personal delivery or fax.

WAC 296-800-35048

Submit progress reports to the Department when required

You must

- Submit progress reports on the abatement if the Citation and Notice requires it and briefly state (a single sentence is normally adequate for each violation):
  - The action taken to abate each violation.
  - The date each action was taken.

Note:

- If progress reports are required, the Citation and Notice will include:
  - The items for which periodic progress reports are required.
  - The date when an initial progress report must be submitted (no sooner than 30 calendar days after you submit a correction plan).
  - Whether additional progress reports are required.
  - The date(s) on which additional progress reports must be submitted.

Rule

WAC 296-800-35049

WISHA determines the date by which abatement documents must be submitted

- When determining if required documents are submitted on time, the Department looks at:
  - Date of postmark for documents sent by mail.
  - Date the Department receives the documents, if transmitted by a means other than mail.

WAC 296-800-35050

Inform affected employees and their representatives of abatement actions you have taken

You must

- Post a copy of each abatement action document you submit to the Department (or a summary) near the place where the violations occurred, if practical.
- Do the following if posting near the violation site isn't practical, such as with a mobile work operation:
  - Post each document (or a summary) in a location that is readily accessible by affected employees and their representatives.
  - Take other steps to fully communicate abatement actions to affected employees and their representatives.

-Continued-

WISHA Appeals, Penalties, & Other Procedural Rules

WAC 296-800-350

Rule

WAC 296-800-35050 (Continued)

- Make sure that:
  - Notice is given to your employees and their representatives on or before the date you submit abatement information to the department.
  - All abatement documents remain posted for at least 3 working days after they are submitted to the department.
  - All posted abatement documents aren't altered, defaced, or covered by other materials.
- Inform employees and their representatives of their right to examine and copy all abatement documents you submit to the department. If they ask to examine or copy your documents within 3 working days of receiving notice that you submitted them to the Department, you have 5 days to comply with their request after receiving it.

WAC 296-800-35052

Tag cited moveable equipment to warn employees of a hazard

You must

- Tag cited moveable equipment to warn employees of a hazard if it hasn't been abated.
  - Attach a warning tag or a copy of the citation to the equipment's operating controls or to the cited component:
    - For hand-held equipment, tag it immediately after you receive a citation.
    - For other equipment, tag it before moving it within the worksite or between worksites.
    - The tag should properly warn employees about the nature of the violation and tell them where the citation is posted (see the Helpful Tools Section for a sample tag that can be used to meet this requirement).

-Continued-

WAC 296-800-35052 (Continued)

- Make sure that the tag or copy of the citation attached to movable equipment isn't altered, defaced, or covered by other materials
- Make sure that the tag or copy of the citation attached to movable equipment remains attached until:
  - You have abated the violation and submitted all abatement certification documents required by the department.
  - You have permanently removed the cited equipment from service.
  - You no longer have control over the cited equipment.
  - A final order sets aside the violation.

Note:

Chapter 296-155 WAC, Safety Standards for Construction Work has information on warning tags. You can use warning tags that meet the requirements in those rules instead of the warning tags required by this rule.

WISHA Appeals, Penalties, & Other Procedural Rules

WAC 296-800-350

Rule

Requesting more Time to Comply

WAC 296-800-35056

You can request more time to comply

- You can request more time to comply if you:
  - Have made a good faith effort to comply with a citation's abatement requirements.
  - Haven't completed your abatement because of factors beyond your control.
- Requests for more time must:
  - Be submitted in writing by you or your representative, and include:
    - The name of your business.
    - The address of the workplace(s).
    - Identification of the citation and the abatement date(s) you want extended.
    - The new abatement date and length of abatement period you are seeking.
    - A description of the actions you have taken to comply with the abatement date(s) in the citation.
    - Identification of the factors beyond your control that are preventing you from complying with the abatement date(s).
    - The means you will use to protect your employees during the time you are abating the violation.
    - Be received before midnight of the date you are asking to be extended.

-Continued-

WAC 296-800-35056 (Continued)

- The Department may accept late requests if they are:
  - Received within 5 days following the applicable correction date
  - Accompanied by your written statement explaining the exceptional circumstances that caused the delay.
- The assistant director may respond to a request received by telephone or personal conversation if the request is timely.

Note:

The Department doesn't accept late requests when compliance activity related to the abatement starts before the request is received.

- The Department accepts requests by:
  - First class mail postage prepaid. Mailed to:

    DEPARTMENT OF LABOR AND INDUSTRIES

    WISHA APPEALS

    P.O. BOX 44604

    OLYMPIA WA 98504-4604
  - Personal delivery
  - Fax: (360) 902-5581

WISHA Appeals, Penalties, & Other Procedural Rules

WAC 296-800-350

Rule

WAC 296-800-35062

WISHA's response to your request for more time

- Before making a decision, WISHA may conduct an investigation. Once made, the decision remains in effect unless a hearing is requested by the employee or employee representative.
- Unless you receive a response from the department granting your request for more time, the original abatement date will remain in effect.

Note:

Although the department may grant more time to correct hazards at its discretion, and employee can appeal if an extension is granted.

WAC 296-800-35063

Post the Department's response

You must

- Post notices with the citation for which you are requesting additional abatement time immediately upon receipt. The notices must remain posted until:
  - The abatement date has passed

    or
  - A hearing notice is posted.

WAC 296-800-35064

A hearing can be requested about the Department's response

- The affected employees, or their authorized representative may request a hearing if they disagree with the Department's response to a request for more time to comply.
- All hearing requests must be sent or delivered to the Assistant Director and be received no later than 10 calendar days after the issue date of the notice.
- Upon receiving a hearing request, the Assistant Director will issue a Notice of Hearing to the requesting party and the employer at least 20 days before the hearing date. The hearing notice will:
  - State that all interested parties can participate in the hearing.
  - Set the time and date, including:
    - the time, place, and nature of the proceeding
    - the legal authority and jurisdiction under which the hearing will be held
    - a reference to the particular sections of the statute and rules involved,
      and
    - a short and clear explanation why a hearing was requested.
- The employer must post the Department's hearing notice or a complete copy until the hearing is held. This includes the:
  - Citation containing the correction date for which more time was requested

WISHA Appeals, Penalties, & Other Procedural Rules

WAC 296-800-350

Rule

WAC 296-800-35065

Post the Department's hearing notice

You must

- Post the Department's hearing notice or a complete copy until the hearing is held. This includes the:
  - Citation containing the correction date for which more time was requested.
  - Department notices issued in response to the employer's request for more time.

WAC 296-800-35066

Hearing procedures

- The Assistant Director for WISHA services will appoint someone from the Department to act as a hearings officer.
- The hearings officer must be present at, and conduct, the hearing. An Assistant Attorney General may be present to give legal advice to the hearings officer.
- If the hearings officer requests, the Assistant Attorney General may conduct the hearing.
- The hearings officer may discuss the material to be presented to determine how the hearing will proceed.
- The hearing must be conducted according to the Administrative Procedure Act. Copies of hearing transcripts will be available to the parties, at cost, upon request.

WISHA Appeals, Penalties, & Other Procedural Rules

WAC 296-800-350

Rule

WAC 296-800-35072

Post the hearing decision

- After the hearing, the Assistant Director will issue an order:
  - Affirming or modifying the correction date that caused the hearing

    and
  - Complying with the provisions of the Administrative Procedure Act, Chapter 34.05 RCW and the Practice and Procedure Rules, Chapter 296-08 WAC.

You must

- Post a complete, unedited copy of this decision, along with the citation to which it applies, as soon as it is received.

Requesting an Appeal of WISHA Citations and Corrective Notices

WAC 296-800-35076

Employers and employees can request an appeal of a Citation and Notice

EMPLOYER REQUESTS

- Any employer cited for a violation of WISHA safety and health rules may appeal a citation or corrective notice.
- Your request must include:
  - Business name, address, telephone number; and the name, address and telephone number of any person representing you.
  - Citation number.
  - What you think is wrong with the citation or corrective notice and any related facts.
  - What you think should be changed, and why.

WISHA Appeals, Penalties, & Other Procedural Rules

WAC 296-800-350

Rule

EMPLOYEE REQUESTS

- Any employee or employee representative who could be affected by a citation or its correction may appeal the abatement date in the citation or corrective notice.
- Your request must include:
  - Your name, address, telephone number, and the name, address and telephone number of any person representing you.
  - Citation number.
  - What you think is wrong with the abatement date.

SUBMITTING APPEAL REQUESTS

- All appeal requests must be in writing and submitted to the Department within 15 working days after receiving the citation corrective notice. If you mail your request, the postmark is considered the submission date.
- All requests must be:
  - Mailed to:

    DEPARTMENT OF LABOR AND INDUSTRIES
    WISHA APPEALS
    P.O. BOX 44604
    OLYMPIA, WA 98504-4604

    or
  - Faxed to: (360) 902-5581

    or
  - Brought to any Department service location.

WISHA Appeals, Penalties, & Other Procedural Rules

WAC 296-800-350

Rule

WAC 296-800-35078

Await the Department's response to your appeal request

- When an appeal request is received, the Department decides whether to reassume jurisdiction over the Citation and Notice being appealed or forward the appeal to the Board of Industrial Insurance Appeals. The Department will notify the person who submitted the appeal when the Department reassumes jurisdiction.

Definition:

Reassume jurisdiction means that the Department has decided to hear the appeal.

- The Department may reassume jurisdiction to:
  - Provide an employer and affected employees an opportunity to present relevant information, facts, and opinions during an informal conference.
  - Give an employer, affected employees and the Department an opportunity to resolve appeals rapidly and without further contest, especially in routine compliance cases.
  - Educate employers about the Citation and Notice, the WISHA appeals process, and WISHA compliance.
  - Review citations, penalties, and correction dates for fairness and accuracy to ensure quality work by the Department.
- If the Department doesn't reassume jurisdiction, it will send the appeal to the Board of Industrial Insurance Appeals. The board will send the person submitting the appeal a notice with the time and location of any board proceedings.

WISHA Appeals, Penalties, & Other Procedural Rules

WAC 296-800-350

Rule

WAC 296-800-35080

Department actions when reassuming jurisdiction over an appeal

- The Department has 30 working days after receipt of the appeal to review it, gather more information and decide whether to make changes to the Citation and Notice. The 30 working days begin with the first working day after the appeal is received. For example, if an appeal is received on Friday, the 30 days will begin on the following Monday unless it is a state holiday.
- The Department may extend the appeal review period up to an additional 15 working days if everyone involved agrees to the extension.
- During the review period, the Department will hold an informal conference about the appeal.
  - An informal conference isn't an evidentiary hearing. It is an opportunity for interested parties to briefly explain their positions and provide any additional information they would like the Department to consider when reviewing the Citation and Notice.
  - Although informal, the conference is an official conference and the Department may record all or part of it. The Department will tell participants when the conference will be recorded.
- After the review period, the Department will issue a corrective notice reflecting any changes made to the Citation and Notice. This notice will be sent to the employer and any employee representatives participating in the appeal process.

WAC 296-800-35082

Appealing a corrective notice

- Anyone who can appeal a Citation and Notice may appeal a corrective notice. All corrective notice appeals must be submitted within 15 working days after the notice was received.

WISHA Appeals, Penalties, & Other Procedural Rules

WAC 296-800-350

Rule

WAC 296-800-35084

Notify employees

You must

- Immediately post all correspondence from the Department in a conspicuous place after submitting an appeal. This correspondence includes:
  - The notice of appeal
  - The notice explaining that the Department reassumed jurisdiction over the Citation and Notice
  - Any extensions to the review period
  - The notice for an informal conference
  - Corrective notices.
- Post all notices and information related to the appeal in the place where WISHA Citations and Notices are posted (see WAC 296 -800-35050). These include:
  - A notice of appeal until the appeal is resolved.
  - Notices about the Department reassuming jurisdiction and any extension of the review period until the end of review period.
  - A notice of an informal conference until after the conference is held.
  - Corrective notices for as long as Citations and Notices must be posted.
  - Requesting alternate means of compliance with WISHA rules.

Note:

If you wish to develop an alternate means of compliance with WISHA rules, you may do so by following the instructions in WAC 296-350-700, Variances from WISHA rules.

- In certain circumstances, the Department allows an employer to vary from a specific WISHA safety and health standard if the employer uses Department-approved substitute measures to protect employees. The substitute measure must provide at least the same protection from workplace hazards as provided by the WISHA standard.

Notes

Using Standards from National Organizations & Federal Agencies

WAC 296-800-360

Rule

YOUR RESPONSIBILITY:

To use the safety and health standards from national organizations and federal agencies, when directed to by WISHA rules

WAC 296-800-36005

Comply with standards of national organizations or federal agencies when referenced in WISHA rules

You must

- Use the following to be in compliance with WISHA rules:
  - The edition of the standard specified in the WISHA rule

    or
  - Any edition published after the edition specified in the WISHA rule.

Note:

The specific standards referenced in the WISHA rules are available:

- For review at your local Department of Labor and Industries office
- See http://www.wa.gov/lni/pa/direct.htm
- Through the local library system
- Through the issuing organization.

Notes

WAC 296-800-370
Definitions

Abatement Action Plans

Refers to your written plans for correcting a WISHA violation.

Abatement date

The date on the citation when you must comply with specific safety and health standards listed on the Citation and Notice of assessment or the corrective notice of redetermination.

Acceptable

As used in Electrical, WAC 296-800-280 means an installation or equipment is acceptable to the Director of Labor and Industries, and approved

- If it is accepted, or certified, or listed, or labeled, or otherwise determined to be safe by a nationally recognized testing laboratory

  or

- With respect to an installation or equipment of a kind which no nationally recognized testing laboratory accepts, certifies, lists, labels, or determines to be safe, if it is inspected or tested by another federal agency, or by a state, municipal, or other local authority responsible for enforcing occupational safety provisions of the National Electrical Code, and found in compliance with the provisions of the National Electrical Code as applied in this section

  or

- With respect to custom-made equipment or related installations which are designed, fabricated for, and intended for use by a particular customer, if it is determined to be safe for its intended use by its manufacturer on the basis of test data which the employer keeps and makes available for inspection to the director and his/her authorized representatives. Refer to federal regulation 29 CFR 1910.7 for definition of nationally recognized testing laboratory.

Accepted

As used in Electrical, WAC 296-800-280 means an installation is accepted if it has been inspected and found by a nationally recognized testing laboratory to conform to specified plans or to procedures of applicable codes.

Definitions

WAC 296-800-370

Access

As used in Material Safety Data Sheets (MSDSs) as Exposure Records, WAC 296-800-180 means the right and opportunity to examine and copy exposure records.

Affected employees

As used in WISHA Appeals, Penalties and Other Procedural Rules, WAC 296-800-350 means employees exposed to hazards identified as violations in a citation.

Analysis using exposure or medical records

- An analysis using exposure records or medical records can be any collection of data or a statistical study. It can be based on either
  - Partial or complete information from individual employee exposure or medical records

    or

  - Information collected from health insurance claim records.
- The analysis is not final until it has been
  - Reported to the employer

    or

  - Completed by the person responsible for the analysis.

ANSI

This is an acronym for the American National Standards Institute.

Approved means:

- Approved by the Director of the Department of Labor and Industries or their authorized representative, or by an organization that is specifically named in a rule, such as Underwriters' Laboratories (UL), Mine Safety and Health Administration (MSHA), or the National Institute for Occupational Safety and Health (NIOSH).
- As used in Electrical, WAC 296-800-280 means acceptable to the authority enforcing this section. The authority enforcing this section is the Director of Labor and Industries. The definition of acceptable indicates what is acceptable to the Director and therefore approved.

Assistant director

The assistant director for the WISHA services division at the Department of Labor and Industries or his/her designated representative.

ASTM

This is an acronym for American Society for Testing and Materials.

Attachment plug or plug

As used in the Basic Electrical Rules, WAC 296-800-280, means the attachment at the end of a flexible cord or cable that is part of a piece of electrical equipment. When it is inserted into an outlet or receptacle, it connects the conductors supplying electrical power from the outlet to the flexible cable.

Bare conductor

A conductor that does not have any covering or insulation.

Bathroom

A room maintained within or on the premises of any place of employment, containing toilets that flush for use by employees.

Biological agents

Organisms or their by-products.

Board

As used in WISHA Appeals, Penalties and Other Procedural Rules, WAC 296-800-350 means the Board of Industrial Insurance Appeals.

Ceiling

An exposure limit that must not be exceeded during any part of the employee's workday. The ceiling must be determined over the shortest time period feasible and shouldn't exceed 15 minutes.

Certification

As used in WISHA Appeals, Penalties and Other Procedural Rules, WAC 296-800-350 means refers to an employer's written statement describing when and how a citation violation was corrected.

Definitions

WAC 296-800-370

CFR

This is an acronym for Code of Federal Regulations.

Chemical

Any element, chemical compound, or mixture of elements and/or compounds.

Chemical agents (airborne or contact)

A chemical agents is any of the following:

- Airborne chemical agent which is any of the following:
  - Dust - solid particles suspended in air, that are created by actions such as:
    - Handling
    - Drilling
    - Crushing
    - Grinding
    - Rapid impact
    - Detonation
    - Decrepitation of organic or inorganic materials such as rock, ore, metal, coal, wood, and grain.
  - Fume - solid particles suspended in air, that are created by condensation from the gaseous state.
  - Gas - a normally formless fluid, such as air, which can be changed to the liquid or solid state by the effect of increased pressure or decreased temperature or both.
  - Mist - liquid droplets suspended in air. Mist is created by:
    - Condensation from the gaseous to the liquid state;
      or

  - Converting a liquid into a dispersed state with actions such as splashing, foaming, spraying or atomizing.

- Vapor - the gaseous form of a substance that is normally in the solid or liquid state.

- Contact chemical agent which is any of the following:

  - Corrosive - a substance that, upon contact, causes destruction of living tissue by chemical action, including acids with a pH of 2.5 or below or caustics with a pH of 11.0 or above.
  - Irritant - a substance that will induce a local inflammatory reaction upon immediate, prolonged, or repeated contact with normal living tissue.
  - Toxicant - a substance that has the inherent capacity to produce personal injury or illness to individuals by absorption through any body surface.

Chemical manufacturer

An employer with a workplace where one or more chemicals are produced for use or distribution.

Chemical name

The scientific designation of a chemical in accordance with one of the following:

- The nomenclature system developed by the International Union of Pure and Applied Chemistry (IUPAC)
- The Chemical Abstracts Service (CAS) rules of nomenclature
- A name which will clearly identify the chemical for the purpose of conducting a hazard evaluation.

Circuit breaker

- Is a device used to manually open or close a circuit. This device will also open the circuit automatically and without damage to the breaker when a predetermined overcurrent is applied. (600 volts nominal or less)
- Is a switching device capable of making, carrying, and breaking currents under normal circuit conditions, and also making, carrying for a specified time, and breaking currents under specified abnormal circuit conditions, such as those of short circuit. (Over 600 volts nominal.)

Definitions

WAC 296-800-370

Citation

Refers to the Citation and Notice issued to an employer for any violation of WISHA safety and health rules. A Citation and Notice may be referred to as a Citation and Notice of assessment but is more commonly referred to as a citation.

Combustible liquid

A combustible liquid has a flashpoint of at least 100°F (37.8°C) and below 200°F (93.3°C). Mixtures with at least 99% of their components having flashpoints of 200°F (93.3°C) or higher are not considered combustible liquids.

Commercial account

As used in Employers Chemical Hazard Communication, WAC 296-800-170, means an arrangement in which a retail distributor sells hazardous chemical(s) to an employer, generally in large quantities over time, and/or at costs that are below the regular retail price.

Common name

As used in Employers Chemical Hazard Communication, WAC 296-800-170, means any designation or identification such as:

- Code name
- Code number
- Trade name
- Brand name
- Generic name used to identify a chemical other than by its chemical name.

Compressed gas

A gas or mixture of gases that, when in a container, has an absolute pressure exceeding

- 40 psi at 70°F (21.1°C)

  or

- 104 psi at 130°F (54.4°C) regardless of the pressure at 70°F (21.1°C).

Compressed gas can also mean a liquid with a vapor pressure that exceeds 40 psi at 100°F (37.8°C)

Conductor

A wire that transfers electric power.

Container

As used in Employer Chemical Hazard Communications, WAC 296-800-170, means any container, except for pipes or piping systems, that contains a hazardous chemical. It can be any of the following:

- Bag
- Barrel
- Bottle
- Box
- Can
- Cylinder
- Drum
- Reaction vessel
- Storage tank.

Correction date

The date by which a violation must be corrected. Final orders or extensions that give additional time to make corrections establish correction dates. A correction date established by an order of the board of industrial insurance appeals remains in effect during any court appeal unless the court suspends the date.

Corrective notice

Refers to a notice changing a citation and is issued by the department after a citation has been appealed.

Definitions

WAC 296-800-370

Corrosive

A substance that, upon contact, causes destruction of living tissue by chemical action, including acids with a pH of 2.5 or below or caustics with a pH of 11.0 or above.

Covered conductor

A conductor that is covered by something else besides electrical insulation.

Damp location

As used in Basic Electrical Rules, WAC 296-800-280, means partially protected areas that are exposed to moderate moisture. Outdoor examples include roofed open porches and marquees. Interior examples include basements and barns.

Department

Those portions of the Department of Labor and Industries responsible for enforcing the Washington Industrial Safety Act (WISHA).

Designated representative

- Any individual or organization to which an employee gives written authorization.
- A recognized or certified collective bargaining agent without regard to written employee authorization.
- The legal representative of a deceased or legally incapacitated employee.

Director

The Director means the Director of the Department of Labor and Industries or their designee.

Distributor

A business, other than a chemical manufacturer or importer, that supplies hazardous chemicals to other distributors or to employers.

Documentation

As used in WISHA Appeals, Penalties and Other Procedural Rules, WAC 296-800-350 means material that you submit to prove that a correction is completed. Documentation includes, but is not limited to, photographs, receipts for materials and/or labor.

Dry location

As used in Basic Electrical Requirements, WAC 296-800-280 means areas not normally subjected to damp or wet conditions. Dry locations may become temporarily damp or wet, such as when constructing a building.

Dust

Solid particles suspended in air that are created by actions such as:

- Handling
- Drilling
- Crushing
- Grinding
- Rapid impact
- Detonation
- Decrepitation of organic or inorganic materials such as rock, ore, metal, coal, wood, and grain.

Electrical outlets

Places on an electric circuit where power is supplied to equipment through receptacles, sockets, and outlets for attachment plugs.

Emergency washing faciities

Emergency washing facilities are emergency showers, eyewashes, eye/face washes, hand-held drench hoses, or other similar units.

Employee

Based on chapter 49.17 RCW, the term employee and other terms of like meaning, unless the context of the provision containing such term indicates otherwise, means an employee of an employer who is employed in the business of his or her employer whether by way of manual labor or otherwise and every person in this state who is engaged in the employment of or who is working under an independent contract the essence of which is personal labor for an employer under this standard whether by way of manual labor or otherwise.

Definitions

WAC 296-800-370

Employee exposure record

As used in Material Safety Data Sheets (MSDSs) as Exposure Records, WAC 296-800-180 means a record containing any of the following kinds of information:

- Environmental (workplace) monitoring or measuring of a toxic substance or harmful physical agent, including personal, area, grab, wipe, or other form of sampling, as well as related collection and analytical methodologies, calculations, and other background data relevant to interpretation of the results obtained
- Biological monitoring results which directly assess the absorption of a toxic substance or harmful physical agent by body systems (e.g., the level of a chemical in the blood, urine, breath, hair, fingernails, etc.) but not including results which assess the biological effect of a substance or agent or which assess an employee's use of alcohol or drugs
- Material Safety Data Sheets indicating that the material may pose a hazard to human health

  or

- In the absence of the above, a chemical inventory or any other record which reveals where and when used and the identity (e.g., chemical, common or trade name) of a toxic substance or harmful physical agent.

Employer

Based on chapter 49.17 RCW, an employer is any person, firm, corporation, partnership, business trust, legal representative, or other business entity which engages in any business, industry, profession, or activity in this state and employs one or more employees or who contracts with one or more persons, the essence of which is the personal labor of such person or persons and includes the state, counties, cities, and all municipal corporations, public corporations, political subdivisions of the state, and charitable organizations: Provided, that any persons, partnership, or business entity not having employees, and who is covered by the Industrial Insurance Act must be considered both an employer and an employee.

Exit

Provides a way of travel out of the workplace.

Exit route

A continuous and unobstructed path of exit travel from any point within a workplace to safety outside.

Explosive

A chemical that causes a sudden, almost instant release of pressure, gas, and heat when exposed to a sudden shock, pressure, or high temperature.

Exposed live parts

Electrical parts that are:

- Not suitably guarded, isolated, or insulated

and

- Capable of being accidentally touched or approached closer than a safe distance.

Exposed wiring methods

Involve working with electrical wires that are attached to surfaces or behind panels designed to allow access to the wires.

Exposure or exposed

As used in Employer Chemical Hazard Communication, WAC 296-800-170, and Material Safety Data Sheets (MSDSs) as Exposure Records, WAC 296-800-180. An employee has been, or may have possibly been, subjected to a hazardous chemical, toxic substance or harmful physical agent while working. An employee could have been exposed to hazardous chemicals, toxic substances, or harmful physical agents in any of the following ways:

- Inhalation
- Ingestion
- Skin contact
- Absorption
- Related means.

-Continued-

WAC 296-800-370 (Continued)

The terms exposure and exposed only cover workplace exposure involving a toxic substance or harmful physical agent in the workplace different from typical nonoccupational situations in the way it is

- Used
- Handled
- Stored
- Generated
- Present.

Exposure record

See definition for employee exposure record.

Extension ladder

A portable ladder with 2 or more sections and is not self-supporting. The 2 or more sections travel in guides or brackets that let you change the length. The size of a portable ladder is determined by adding together the length of each section.

Failure-to-abate

Any violation(s) resulting from not complying with an abatement date.

Final order

Any of the following (unless an employer or other party files a timely appeal):

- Citation and Notice
- Corrective Notice
- Decision and Order from the Board of Industrial Insurance Appeals
- Denial of Petition for review from the Board of Industrial Insurance Appeals

  or

- Decision from a Washington State Superior Court, Court of Appeals, or the State Supreme Court.

Final order date

The date a final order is issued.

First aid

The extent of treatment you would expect from a person trained in basic first aid, using supplies from a first-aid kit.

Tests, such as X-rays, must not be confused with treatment.

Flammable

A chemical covered by one of the following categories:

- Aerosol flammable means an aerosol that, when tested by the method described in 16 CFR 1500.45 yields either a flame projection more than 18 inches at full valve opening or a flashback (a flame extending back to the valve) at any degree of valve opening.
- Gas, flammable means:
  - A gas that, at temperature and pressure of the surrounding area, forms a flammable mixture with air at a concentration of 13% by volume or less.

    or

  - A gas that, at temperature and pressure of the surrounding area, forms a range of flammable mixtures with air wider than 12% by volume, regardless of the lower limit.
- Liquid, flammable means any liquid having a flashpoint below 100°F (37.8°C), except any mixture having components with flashpoints of 100°F (37.8°C) or higher, the total of which make up 99% or more of the total volume of the mixture.
- Solid, flammable means a solid, other than a blasting agent or explosive as defined in 29 CFR 1910.109(a), that is likely to cause fire through friction, moisture absorption, spontaneous chemical change, or retained heat from manufacturing or processing, or which can be ignited readily. Solid, inflammable also means that when the substance is ignited, it burns so powerfully and persistently that it creates a serious hazard. A chemical must be considered to be a flammable solid if, when tested by the method described in 16 CFR 1500.44, it ignites and burns with a self-sustained flame at a rate greater than one-tenth of an inch per second along its major axis.

Flashpoint

- The minimum temperature at which a liquid gives off a vapor in sufficient concentration to ignite when tested by any of the following measurement methods:

  – Tagliabue closed tester: (See American National Standard Method of Test for Flashpoint by Tag Closed Tester, Z11.24-1979 (ASTM D 56-79)) for liquids with a viscosity of less than 45 Saybolt Universal Seconds (SUS) at 100°F (37.8°C), that do not contain suspended solids and do not have a tendency to form a surface film under test.

  or

  – Pensky-Martens closed tester: (See American National Standard Method of Test for Flashpoint by Pensky-Martens Closed Tester, Z11.7-1979 (ASTM D 93-79)) for liquids with a viscosity equal to or greater than 45 SUS at 100°F (37.8°C), or that contain suspended solids, or that have a tendency to form a surface film under test; or

  – Setaflash closed tester. (See American National Standard Method of Test for Flashpoint by Setaflash Closed Tester (ASTM D 3278-78)).

Note:

Organic peroxides, which undergo auto accelerating thermal decomposition, are excluded from any of the flashpoint measurement methods specified above.

Flexible cords and cables

Typically used to connect electrical equipment to an outlet or receptacle. These cords can have an attachment plug to connect to a power source or can be permanently wired into the power source. Flexible cords, extension cords, cables and electrical cords are all examples of flexible cord.

Floor hole

An opening in any floor, platform, pavement, or yard that measures at least one inch but less than 12 inches at its smallest dimension and through which materials and tools (but not people) can fall.

Examples of floor holes are:

- Belt holes
- Pipe openings
- Slot openings.

Floor opening

An opening in any floor, platform, pavement, or yard that measures at least 12 inches in its smallest dimension and through which a person can fall.

Examples of floor openings are:

- Hatchways
- Stair or ladder openings
- Pits
- Large manholes

The following are **NOT** considered floor openings:

- Openings occupied by elevators
- Dumbwaiters
- Conveyors
- Machinery
- Containers.

Definitions

WAC 296-800-370

Foreseeable emergency

As used in Employer Chemical Hazard Communications, WAC 296-800-170 means any potential event that could result in an uncontrolled release of a hazardous chemical into the workplace. Examples of foreseeable emergencies include equipment failure, rupture of containers, or failure of control equipment.

Fume

Solid particles suspended in air that are created by condensation from the gaseous state.

Gas

A normally formless fluid, such as air, which can be changed to the liquid or solid state by the effect of increased pressure or decreased temperature or both.

Ground

As used in Electrical, WAC 296-800-280, a connection between an electrical circuit or equipment and the earth or other conducting body besides the earth. This connection can be intentional or accidental.

Grounded

A connection has been made between an electrical circuit or equipment and the earth or another conducting body besides the earth.

Grounded conductor

A system or circuit conductor that is intentionally grounded.

Ground-fault circuit-interrupter

A device whose function is to interrupt the electric circuit to the load when a fault current to ground exceeds some predetermined value that is less than that required to operate the overcurrent protective device of the supply circuit.

Grounding conductor

Is used to connect equipment or the grounded circuit of a wiring system to a grounding electrode or electrodes.

Grounding conductor, equipment

A conductor used to connect noncurrent-carrying metal parts of equipment, raceways, and other enclosures to the system grounded conductor and/or the grounding electrode conductor at the service equipment or at the source of a separately derived system.

Guarded

Covered, shielded, fenced, enclosed, or otherwise protected by means of suitable covers, casings, barriers, rails, screens, mats, or platforms to remove the likelihood of being accidentally touched or approached closer than a safe distance.

Hand-held drench hoses

Hand-held drench hoses are single-headed emergency washing devices connected to a flexible hose that can be used to irrigate and flush the face or other body parts.

Handrail

A single bar or pipe supported on brackets from a wall or partition to provide a continuous handhold for persons using a stair.

Harmful physical agent

Any physical stress such as, noise, vibration, repetitive motion, heat, cold, ionizing and nonionizing radiation, and hypo- or hyperbaric pressure, etc.) which:

- Is listed in the latest edition of the National Institute for Occupational Safety and Health (NIOSH) Registry of Toxic Effects of Chemical Substances (RTECS);

  or

- Has shown positive evidence of an acute or chronic health hazard in testing conducted by, or known to, the employer;

  or

- Is the subject of a material safety data sheet kept by or known to the employer showing that the material may pose a hazard to human health.

Definitions

WAC 296-800-370

Hazard

Any condition, potential or inherent, which can cause injury, death, or occupational disease.

Hazard warning

As used in Employer Chemical Hazard Communications, WAC 296-800-170 means can be a combination of words, pictures, symbols, or combination appearing on a label or other appropriate form of warning which shows the specific physical and health hazard(s), including target organ effects, of the chemical(s) in the container(s).

Note:

See definition for physical hazard and health hazard to determine which hazards must be covered.

Hazardous chemical

Any chemical that is a physical or health hazard.

Health hazard

A chemical, mixture, biological agent, or physical agent that may cause health effects in short- or long-term exposed employees. Based on statistically significant evidence from at least one study conducted using established scientific principles. Health hazards include:

- Carcinogens
- Toxic or highly toxic agents
- Reproductive toxins
- Irritants
- Corrosives
- Sensitizers
- Hepatotoxins (liver toxins)
- Nephrotoxins (kidney toxins)
- Neurotoxins (nervous system toxins)

-Continued-

WAC 296-800-370 (Continued)

- Substances that act on the hematopoietic system (blood or blood-forming system)
- Substances that can damage the lungs, skin, eyes, or mucous membranes
- Hot or cold conditions.

Hospitalization

To be sent to, to go to, or be admitted to, a hospital or an equivalent medical facility and receive medical treatment beyond first-aid treatment, regardless of the length of stay in the hospital or medical facility.

Identity

As used in Employer Chemical Hazard Communications, WAC 296-800-170 any chemical or common name listed on the Material Safety Data Sheet (MSDS) for the specific chemical. Each identity used must allow cross-references among the:

- Required list of hazardous chemicals
- Chemical label
- MSDSs.

Imminent danger violation

Any violation(s) resulting from conditions or practices in any place of employment, which are such that a danger exists which could reasonably be expected to cause death or serious physical harm, immediately or before such danger can be eliminated through the enforcement procedures otherwise provided by the Washington Industrial Safety and Health Act.

Definitions

WAC 296-800-370

Importer

The first business within the Customs Territory of the USA that:

- Receives hazardous chemicals produced in other countries

  and

- Supplies them to distributors or employers within the USA.

Insulated

A conductor has been completely covered by a material that is recognized as electrical insulation and is thick enough based on

- The amount of voltage involved

  and

- The type of covering material.

Interim waiver

An order granted by the department allowing an employer to vary from WISHA requirements until the Department decides to grant a permanent or temporary waiver.

Irritant

A substance that will induce a local inflammatory reaction upon immediate, prolonged, or repeated contact with normal living tissue.

Ladder

Consists of 2 side rails joined at regular intervals by crosspieces called steps, rungs, or cleats. These steps are used to climb up or down.

Listed

Equipment is listed if it:

- Is listed in a publication by a nationally recognized laboratory (such as UL, underwriters laboratory) that inspects the production of that type of equipment.

  and

- States the equipment meets nationally recognized standards or has been tested and found safe to use in a specific manner.

Material Safety Data Sheet (MSDS)

Written, printed, or electronic information (on paper, microfiche, or on-screen) that informs manufacturers, distributors, employers or employees about a hazardous chemical, its hazards, and protective measures as required by Material Safety Data Sheet and Label Preparation, chapter 296-839 WAC.

Medical treatment

Treatment provided by a physician or by registered professional personnel under the standing orders of a physician. Medical treatment does not include first-aid treatment even if provided by a physician or registered professional personnel.

Mist

Liquid droplets suspended in air. Mist is created by:

- Condensation from the gaseous to the liquid state;
  or

- Converting a liquid into a dispersed state with actions such as splashing, foaming, spraying or atomizing.

Mixture

As used in Employer Chemical Hazard Communication, WAC 296-800-170, any combination of 2 or more chemicals (if that combination did not result from a chemical reaction).

Movable equipment

As used in WAC 296-800-35052, a hand-held or nonhand-held machine or device

- That is powered or nonpowered

  and

- Can be moved within or between worksites.

Must

Must means mandatory.

NEMA

These initials stand for National Electrical Manufacturing Association.

NFPA

This is an acronym for National Fire Protection Association.

Nose

The portion of the stair tread that projects over the face of the riser below it.

Occupational Safety and Health Administration (OSHA)

Created in 1970 when the U.S. Congress passed the Occupational Safety and Health Act, the Occupational Safety and Health Administration (OSHA) provides safety on the job for workers. OSHA oversees state plans (such as WISHA in Washington) that have elected to administer the safety and health program for their state. OSHA requires WISHA rules to be at least as effective as OSHA rules.

Office work environment

An indoor or enclosed occupied space where clerical work, administration, or business is carried out.

In addition, it includes:

- Other workplace spaces controlled by the employer and used by office workers, such as cafeterias, meeting rooms, and washrooms.
- Office areas of manufacturing and production facilities, not including process areas.
- Office areas of businesses such as food and beverage establishments, agricultural operations, construction, commercial trade, services, etc.

Open riser

A stair step with an air space between treads has an open riser.

Organic peroxide

This is an organic compound containing the bivalent-0-0-structure. It may be considered a structural derivative of hydrogen peroxide if one or both of the hydrogen atoms has been replaced by an organic radical.

Outlet

See definition for electrical outlets.

Oxidizer

A chemical other than a blasting agent or explosive as defined in WAC 296-52-60130 or CFR 1910.109(a), that starts or promotes combustion in other materials, causing fire either of itself or through the release of oxygen or other gases.

Permissible exposure limits (PELs)

Permissible exposure limits (PELs) are employee exposures to toxic substances or harmful physical agents that must not be exceeded. PELs are specified in applicable WISHA rules.

Person

Based on chapter 49.17 RCW, one or more individuals, partnerships, associations, corporations, business trusts, legal representatives, or any organized group of persons.

Personal eyewash units

Personal eyewash units are portable, supplementary units that support plumbed units or self-contained units, or both, by delivering immediate flushing for less than 15 minutes.

Personal service room

Used for activities not directly connected with a business' production or service function such as:

- First-aid
- Medical services
- Dressing
- Showering
- Bathrooms
- Washing
- Eating.

Personnel

See the definition for employees.

Physical hazard

As used in Employer Chemical Hazard Communication, WAC 296-800-170 means a chemical that has scientifically valid evidence to show it is one of the following:

- Combustible liquid
- Compressed gas
- Explosive
- Flammable
- Organic peroxide
- Oxidizer
- Pyrophoric
- Unstable (reactive)
- Water reactive.

Platform

Platform means an extended step or landing that breaks a continuous run of stairs.

Plug

See definition for attachment plug.

Potable water

Water that you can safely drink. It meets specific safety standards prescribed by the United States Environmental Protection Agency's National Interim Primary Drinking Water Regulations, published in 40 CFR Part 141, and 40 CFR 147.2400.

Predictable and regular basis

Employee functions such as, but not limited to, inspection, service, repair and maintenance which are performed:

- At least once every 2 weeks

  or

- 4 man-hours or more during any sequential 4-week period. (To calculate man-hours multiply the number of employees by the number of hours during a 4-week period.)

Produce

As used in Employer Chemical Hazard Communication, WAC 296-800-170, any one of the following:

- Manufacture
- Process
- Formulate
- Blend
- Extract
- Generate
- Emit
- Repackage.

Purchaser

As used in Employer Chemical Hazard Communication, WAC 296-800-170, an employer who buys one or more hazardous chemicals to use in their workplace.

Pyrophoric

A chemical is pyrophoric if it will ignite spontaneously in the air when the temperature is 130°F (54.4°C) or below.

Qualified person

A person who has sucessfully demostrated the ability to solve problems relating to the subject matter, work, or project, either by:

- Possession of a recognized degree, certificate, or professional standing;

or

- Extensive knowledge, training and experience.

Railing or standard railing

A vertical barrier erected along exposed edges of a floor opening, wall opening, ramp, platform, or runway to prevent falls of persons.

Reassume jurisdiction

The department has decided to take back its control over a citation and notice being appealed.

Receptacle or receptacle outlet

As used in Basic Electrical Rules, WAC 296-800-280 means outlets that accept a plug to supply electric power to equipment through a cord or cable.

Record

A record is any item, collection, or grouping of information. Examples include:

- Paper document
- Microfiche
- Microfilm
- X-ray film
- Computer record.

Definitions

WAC 296-800-370

Repeat violation

A violation is a repeat violation if the employer has been cited one or more times previously for a substantially similar hazard.

Responsible party

As used in Employer Chemical Hazard Communication, WAC 296-800-170. Someone who can provide appropriate information about the hazardous chemical and emergency procedures.

Rise

The vertical distance from the top of a tread to the top of the next higher tread.

Riser

The vertical part of the step at the back of a tread that rises to the front of the tread above.

Rungs

Rungs are the cross pieces on ladders that are used to climb up and down the ladder.

Runway

An elevated walkway above the surrounding floor or ground level. Examples of runways are footwalks along shafting or walkways between buildings.

Safety factor

The term safety factor means the ratio of when something will break versus the actual working stress or safe load when it is used.

Serious violation

Serious violation must be deemed to exist in a workplace if there is a substantial probability that death or serious physical harm could result from a condition which exists, or from one or more practices, means, methods, operations, or processes which have been adopted or are in use in such workplace, unless the employer did not, and could not with the exercise of reasonable diligence, know of the presence of the violation.

Short-term exposure limit (STEL)

An exposure limit, averaged over a short time period (usually measured for 15 minutes) that must not be exceeded during any part of an employee's workday.

Should

Should means recommended.

Single ladder

A type of portable ladder with one section.

It is distinguished by all of the following:

- It has one section
- It cannot support itself
- Its length cannot be adjusted.

Smoking

A person is smoking if they are:

- Lighting up
- Inhaling
- Exhaling
- Carrying a pipe, cigar or cigarette of any kind that is burning.

Specific chemical identity

This term applies to chemical substances. It can mean the:

- Chemical name
- Chemical Abstracts Service (CAS) registry number
- Any other information that reveals the precise chemical designation of the substance.

Stair railing

A vertical barrier attached to a stairway with an open side to prevent falls. The top surface of the stair railing is used as a handrail

Stairs or stairway

A series of steps and landings:

- Leading from one level or floor to another.
- Leading to platforms, pits, boiler rooms, crossovers, or around machinery, tanks, and other equipment.
- Used more or less continuously or routinely by employees, or only occasionally by specific individuals.
- With three or more risers.

Standard safeguard

Safety devices that prevent hazards by their attachment to:

- Machinery
- Appliances
- Tools
- Buildings
- Equipment.

These safeguards must be constructed of:

- Metal
- Wood
- Other suitable materials.

The Department makes the final determination about whether a safeguard is sufficient for its use.

Step ladder

A portable ladder with:

- Flat steps
- A hinge at the top allowing the ladder to fold out and support itself
- Its length that cannot be adjusted.

Time weighted average (TWA_8)

An exposure limit, averaged over 8 hours, that must not be exceeded during an employee's work shift.

Toeboard

A barrier at floor level along exposed edges of a floor opening, wall opening, platform, runway, or ramp, to prevent falls of materials.

Toxic chemical

As used in first aid, WAC 296-800-150, is a chemical that produces serious injury or illness when absorbed through any body surface.

Toxic substance

Any chemical substance or biological agent, such as bacteria, virus, and fungus, which is any of the following:

- Listed in the latest edition of the National Institute for Occupational Safety and Health (NIOSH) Registry of Toxic Effects of Chemical Substances (RTECS)
- Shows positive evidence of an acute or chronic health hazard in testing conducted by, or known to, the employer
- The subject of a material safety data sheet kept by or known to the employer showing the material may pose a hazard to human health.

Toxicant

A substance that has the inherent capacity to produce personal injury or illness to individuals by absorption through any body surface.

Trade secret

Any confidential

- Formula
- Pattern
- Process
- Device
- Information
- Collection of information.

The trade secret is used in an employer's business and gives an opportunity to gain an advantage over competitors who do not know or use it.

See WAC 296-62-053 for requirements dealing with trade secrets.

Tread

As used in Stairs and Stair Railings, WAC 296-800-250 means the horizontal part of the stair step.

Tread run

As used in Stairs and Stair Railings, WAC 296-800-250 means the distance from the front of one stair tread to the front of an adjacent tread.

Tread width

The distance from front to rear of the same tread including the nose, if used.

UL (Underwriters' Laboratories, Inc.)

You will find these initials on electrical cords and equipment. The initials mean the cord or equipment meets the standards set by the Underwriters' Laboratories, Inc.

Unstable (reactive)

As used in Employer Chemical Hazard Communication, WAC 296-800-170. An unstable or reactive chemical is one that in its pure state, or as produced or transported, will vigorously polymerize, decompose, condense, or will become self-reactive under conditions of shocks, pressure or temperature.

Use

As used in Employer Chemical Hazard Communication, WAC 296-800-170, means to:

- Package
- Handle
- React
- Emit
- Extract
- Generate as a by-product
- Transfer.

Vapor

The gaseous form of a substance that is normally in the solid or liquid state.

Voltage of a circuit

The greatest effective potential difference between any two conductors or between a conductor and ground.

Voltage to ground

The voltage between a conductor and the point or conductor of the grounded circuit. For undergrounded circuits, it is the greatest voltage between the conductor and any other conductor of the circuit.

Voltage, nominal

Nominal voltage is a value assigned to a circuit or system to designate its voltage class (120/240, 480Y/277, 600, etc.). The actual circuit voltage can vary from the value if it is within a range that permits the equipment to continue operating in a satisfactory manner.

WAC

This is an acronym for Washington Administrative Code, which are rules developed to address state law.

Water-reactive

As used in Employer Chemical Hazard Communication, WAC 296-800-170, a water-reactive chemical reacts with water to release a gas that is either flammable or presents a health hazard.

Watertight

Constructed so that moisture will not enter the enclosure or container.

Weatherproof

Constructed or protected so that exposure to the weather will not interfere with successful operation. Rainproof, raintight, or watertight equipment can fulfill the requirements for weatherproof where varying weather conditions other than wetness, such as snow, ice, dust, or temperature extremes, are not a factor.

Wet location

As used in Basic Electrical Rules, WAC 296-800-280 means:

- Underground installations or in concrete slabs or masonry that are in direct contact with the earth
- Locations that can be saturated by water or other liquids.
- Unprotected locations exposed to the weather (like vehicle washing areas).

WISHA

This is an acronym for the Washington Industrial Safety and Health Act.

Work area

As used in employer chemical hazard communication, WAC 296-800-170, a room or defined space in a workplace where hazardous chemicals are produced or used, and where employees are present.

Working days

Means a calendar day, except Saturdays, Sundays, and legal holidays. Legal holidays include:

- New Year's Day - January 1
- Martin Luther King, Jr. Day
- Presidents' Day
- Memorial Day
- Independence Day - July 4
- Labor Day
- Veterans' Day - November 11
- Thanksgiving Day
- The day after Thanksgiving Day; and
- Christmas Day - December 25

The number of working days must be calculated by not counting the first working day and counting the last working day.

Worker

See the definition for employee.

Definitions

WAC 296-800-370

Workplace

The term workplace means:

- Any plant, yard, premises, room, or other place where an employee or employees are employed for the performance of labor or service over which the employer has the right of access or control, and includes, but is not limited to, all workplaces covered by industrial insurance under Title 51 RCW, as now or hereafter amended.
- As used in Employer Chemical Hazard Communication, WAC 296-800-170, means an establishment, job site, or project, at one geographical location containing one or more work areas.

You

See definition of employer.

Your representative

Your representative is the person selected to act in your behalf.

Resources

Helpful Tools

Accident Investigation Report R-3
Accident/Incident Table R-5
Additional Program Requirements Table R-7
Employee Rights Under WISHA R-9
Hazard Assessment Checklist R-11
Report of a Workplace Hazard R-15
Safety Meeting Minutes R-17
Sample Hazardous Chemical Communication Program R-19
Sample Labels for Hazardous Chemical Containers R-25
Sample Letter for Requesting a Material Safety Data Sheet (MSDS) . R-27
Training Documentation Form R-29

Other Resources

Complete List of Safety & Health Rules R-31
Links to Other Information R-39
OSHA/WISHA Rules Comparison R-43
Service Locations for Labor & Industries R-45
Requesting Information R-49

1•800•4BE SAFE (1•800•423•7233)

Accident Investigation Report

Use with 296-800-320 Accidents and Incidents, Investigating and Reporting

This sample report form can help document the findings of a preliminary investigation into an accident or incident in your workplace. You can copy and use this form or make your own. Fill out an investigation report as soon as possible after an accident or incident.

Employee(s) name(s): _____

_____

Time & date of accident/incident: _____

Job title(s) and department(s): _____

_____

Supervisor/lead person: _____

Witnesses: _____

_____

Brief description of the accident or incident: _____

_____

_____

Indicate body part affected:

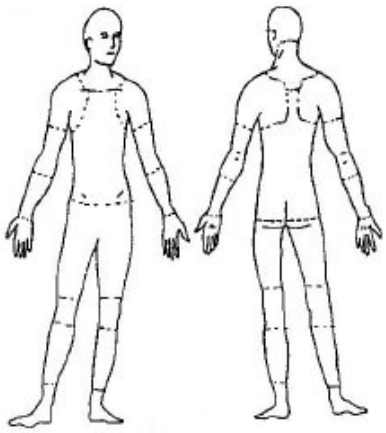

Did the injured employee(s) see a doctor? **( ) Yes ( ) No**

Accident Investigation Report

Use with 296-800-320 Accidents and Incidents, Investigating and Reporting

If yes, did you file an employer's portion of a worker's compensation form? ( ) Yes ( ) No

Did the injured employee(s) go home during their work shift? ( ) Yes ( ) No

If yes, list the date and time injured employee(s) left job(s): _____

_____

Supervisor's Comments: _____

_____

What could have been done to prevent this accident/incident? _____

_____

Have the unsafe conditions been corrected? ( ) Yes ( ) No

If yes, what has been done? _____

_____

_____

If no, what needs to be done? _____

_____

_____

Employer or Supervisor's signature: _____

Date: _____

Additional comments/notes: _____

_____

_____

_____

Accident/Incident Table

Use with 296-800-320 Accidents and Investigations

What's the purpose of this table?

To help you determine if you need to contact L&I or do an investigation in your workplace after an accident or incident.

When do we use this table?

Use this tool when an accident or incident happens or as soon as possible afterwards.

Accident/Incident Table:

Action you must take:	In case of death or probable death	Accident involving inpatient hospitalization of 2 or more people	In case of serious injury or illness	Near miss (accident almost happened) or non-serious injury or illness
Report the accident to L&I and include your phone number.	Required	Required	Not Required	Not Required
Complete and document an investigation.	Required	Required	Required	Not Required

Questions?

You can call L&I's toll-free number for more information: 1-800-4BE SAFE

Additional Program Requirements Table

This table will help you determine additional programs, plans, and other related requirements that might be needed beyond your accident prevention program (your total safety and health plan). If you are required to have additional written programs or procedures, they can be included in your accident prevention program or covered in supplemental documents.

To use this table:

1. Determine if any of the activities, hazards or situations listed in the first column apply to your workplace.
2. The second column lists what you may have to do or additional written programs you may be required to have.
3. Look-up the standard or rule that is in column three. This will allow you to determine if the actual situation at your workplace makes it necessary for you to do anything and will identify what you must do.

Note:

- There are record keeping requirements in chapter 296-27 WAC and elsewhere that you need to be aware of.
- Certain job-specific activities need written, site or activity-specific work plans (for example, the fall protection work plan and lead exposure in construction work).
- There are vertical standards that apply to specific industries, which may have additional program requirements. Be sure to check to find out if these standards apply to you.

Additional Program Requirements Table

1. If individuals in your workplace:	2. Then you may need to:	3. See:
Are exposed to **hazards**	Determine personal protective equipment (PPE) required based on a mandatory job hazard assessment. **Written** certification is also mandatory.	WAC 296-800-160
Work around **hazardous chemicals**	Establish a **written** chemical hazard communication program	WAC 296-800-170
Service, adjust, or maintain equipment in your workplace where people could be injured by the unexpected start-up of the machine or the release of stored energy	Establish a **written** energy control (lockout/tagout) program	Chapter 296-24 WAC, Part A-4 (After November 1, 2004 see Chapter 296-803 WAC)
Work around **loud noise**	Establish a hearing conservation program, including hearing tests and training	Chapter 296-817 WAC
Weld, cut, or **do brazing**	Make sure rules and instructions to operate and maintain oxygen or fuel-gas supply equipment are readily available	Chapter 296-24 WAC , Part I
Are required to use **respirators or voluntarily use respirators** to protect against airborne hazards	Establish a **written** respirator program	Chapter 296-842 WAC
May be exposed to blood or other potentially infectious material (**bloodborne pathogens**)	Establish a **written** exposure control plan	Chapter 296-823 WAC
May encounter **confined spaces** in your workplace	Conduct a survey to identify confined spaces. If employees are to enter confined spaces, special procedures and a written program may be required	Chapter 296-809 WAC
Work in **late night retail** (a retail establishment open between 11:00 p.m. and 6:00 a.m.	Provide crime prevention training as part of your accident prevention program	Chapter 296-832 WAC
May be injured by an activated **fire suppression system**	Establish a **written** emergency action plan	Chapter 296-24 WAC, Part G-1
Are required to perform specific actions during emergency situations involving the release of **hazardous substances**	Establish a **written** emergency response plan or, if appropriate, a **written** emergency action plan	Chapter 296-824 WAC and Chapter 296-24 WAC, Part G-1
Are **agricultural** workers	Follow accident prevention program requirements in WAC 296-307-030. Agricultural employees aren't covered by chapter 296-24 WAC	Chapter 296-307 WAC
Are electrical workers working on or near **high voltage**	Include additional elements in your accident prevention program	Chapter 296-45 WAC
Are **fire fighters**	Develop a risk management policy with incident strategies that can be incorporated into the incident command system	Chapter 296-305 WAC

Additional Program Requirements Table

1. If individuals in your workplace:	2. Then you may need to:	3. See:
Are exposed to substances such as **asbestos, tremolite, anthopylite,** or **atinolite**	Establish and implement a written program to reduce employee exposure to or below the permissible limit	Chapter 296-62 WAC, Part I-1
Are involved in **hazardous waste operations**	Develop and implement a written safety and health program for these operations	Chapter 296-843 WAC
Are involved with **diving operations**	Develop and maintain a written safe practices manual	Chapter 296-37 WAC
Are invovled with **ski area facilities** and operations	Develop a specific written safety program	Chapter 296-59 WAC
Are involved with **telecommunica-tions**	Include additional elements in your accident prevention program that specifically cover this work	Chapter 296-32 WAC
May be exposed to specific **air contaminants** (listed in Chapter 296-62 WAC)	Establish and implement a written compliance program	Chapter 296-62 WAC, Part I
Use **powered platforms** installed as part of a building to do building maintenance	Provide written work procedures for the operation, safe use, and inspection of the equipment	Chapter 296-24 WAC, Part J-3
Work in **laboratory** using hazardous chemicals	Develop and carry out the provisions of a written chemical hygiene plan	Chapter 296-62 WAC, Part Q
Work in **grain handling facilities**	Develop and implement a written housekeeping program	Chapter 296-99 WAC
May be exposed to certain **carcinogens** (cancer causing agents)	Implement a written program to reduce exposure to or below permissible limits	Chapter 296-62 WAC , Part G
Work with toxic, reactive, flammable, or explosive chemicals (**process safety management of highly hazardous chemicals**)	Develop a written plan for preventing or minimizing the consequences of catastrophic releases	Chapter 296-67 WAC
Are **blasting** from an **aircraft**	This requires a written program approved by the Federal Aviation Administration and the director of the department of lobor and industries	Chapter 296-59 WAC
Are exposed to operating **coke ovens**	Implement a written program to reduce employee exposure	Chapter 296-62 WAC, Part O

Employee Rights Under WISHA

Use with WAC 296-800-120 Employee Responsibilties & Chapter 296-360 WAC Discrimination

If you, as an employee, complain about or report information about safety or health issues, you have specific rights protected under WISHA. See the table below to find out more.

If:	Then:
You believe you're being asked to do something potentially unsafe...	Report it to your employer and ask them to correct it, ask for other work, remain on the job until ordered to leave by the employer, or inform the employer that you will refuse to work if the hazard is not corrected.
You file a Safety or Health complaint for violations of Washington Administrative Code (WAC)...	L&I will review your complaint to see if it warrants investigation.
You quit or leave the worksite because your employer asks you to do something potentially unsafe on the job...	WISHA may not be able to protect your rights or investigate your complaint. However, you are not required to do potentially unsafe work.
You give a witness statement to a compliance inspector during an accident investigation or safety and health inspection...	You may ask to have your identity withheld at the time you give your statement. The compliance inspector should have you date, sign, and check the applicable blocks on a witness statement form.
Your employer retaliates against you for filing a complaint or giving a compliance inspector a statement about an accident or safety and health inspection...	You have 30 days to file a discrimination complaint against your employer. To file a complaint contact your local Labor & Industries office and ask for the WISHA Discrimination Section.

Note:

Other protections exist for employees under Title 51.

Questions?

You can either call 1-800 4BESAFE or visit the WISHA website at http://www.lni.wa.gov/wisha for more information.

1•800•4BE SAFE (1•800•423•7233)

Hazard Assessment Checklist

Use with WAC 296-800-160 Personal Protective Equipment (PPE)

This checklist can help you do a hazard assessment to see if employees need to use personal protective equipment (PPE). You can make copies or develop a form that is appropriate to your workplace.

Some work activities are more hazardous than others. This list can help identify those activities that may create hazards for your employees. Read through the list, putting a check next to any word that describes an activity in your workplace. We've grouped the activities according to what part of the body might need PPE.

Eyes

Work activities:

( ) sawing
( ) sanding
( ) chopping
( ) intense light/welding
( ) cutting
( ) grinding
( ) hammering
( ) other _____
( ) drilling
( ) punch press operations
( ) abrasive blasting

Work related exposure to:

( ) airborne dust
( ) hazardous liquid chemicals
( ) flying particles
( ) blood splashes
( ) other _____

Face

Work activities:

( ) pouring
( ) cleaning
( ) welding
( ) cooking
( ) mixing
( ) siphoning
( ) pouring molten metal
( ) other _____
( ) painting
( ) dip tank operations
( ) foundry work

Work related exposure to:

( ) extreme heat
( ) hazardous liquid chemicals
( ) cold
( ) potential irritants
( ) other _____

Head

Work activities:

( ) construction
( ) building maintenance
( ) use of conveyor belts
( ) utility work
( ) use of crane loads
( ) confined space operations
( ) use of catwalks
( ) electrical wiring
( ) other _____

Work related exposure to:

( ) falling objects
( ) pipes
( ) other _____
( ) beams
( ) exposed electrical wiring or components
( ) machine parts

Feet

Work activities:

( ) construction
( ) building maintenance
( ) use of highly flammable materials
( ) logging
( ) plumbing
( ) trenching
( ) food processing
( ) foundry work
( ) demolition
( ) welding
( ) other _____

Work related exposure to:

( ) tools
( ) slippery surfaces
( ) explosive atmospheres
( ) heavy equipment
( ) explosives
( ) other _____
( ) exposed electrical wiring or components

Hands

Work activities such as:

( ) grinding
( ) hammering
( ) material handling
( ) cooking
( ) sanding
( ) sawing
( ) working with glass
( ) welding
( ) dental and health care services
( ) other
( ) use of computers
( ) use of knives
( ) baking

Work related exposure to:

( ) tools or materials that could scrape, bruise, or cut
( ) irritating chemicals
( ) blood
( ) other _____

Inhalation

Work activities such as:

( ) pouring
( ) cleaning
( ) compressed air or gas operations
( ) mixing
( ) sawing
( ) painting
( ) fiberglass installation
( ) other _____

Work related exposure to:

( ) irritating dust
( ) extreme heat/cold
( ) other _____

Hazard Assessment Checklist

Use with WAC 296-800-160 Personal Protective Equipment (PPE)

Hearing

Work activities such as:

( ) machining
( ) sanding
( ) pneumatic equipment
( ) routers
or
( ) other _____
( ) grinding
( ) use of conveyors
( ) generators
( ) punch or brake presses
( ) sawing
( ) motors
( ) ventilation fans

Work related exposure to:

( ) noisy machines/tools
( ) loud noises
( ) loud work environment
( ) other_____
( ) punch or brake presses

General Hazards

Work activities such as:

( ) utility work
( ) construction
( ) logging
( ) other_____
( ) building maintenance

Work related exposure to:

( ) working from heights of 10 feet or more
( ) other _____
( ) working near water

Skin

Work activities such as:

( ) battery charging
( ) dip tank operations
( ) sawing
( ) irritating chemicals
( ) fiberglass installation
( ) baking or frying

Work related exposure to:

( ) sharp or rough edges
( ) chemical splashes
( ) extreme heat/cold

Your name: _____

Name of your workplace: _____

Workplace address: _____

_____

Dates of Hazard Assessment for PPE:_____

1•800•4BE SAFE (1•800•423•7233)

Report of a Workplace Hazard

Use with WAC 296-800-120 Employee Responsibilities and WAC 296-800-140 Accident Prevention Program

This is an optional form, that either, an employee or employer can use to report a hazard.

If you complete this as an employee, give a completed copy to your employer. If you don't want to include your name on the form, make sure to give enough details about the hazard so your employer can recognize and correct it.

Your name:_____ **Today's Date:**_____

(Optional)

Briefly describe the workplace hazard:

(Please give more details if you are filling this out anonymously. Use the back if you need more room)

Where is the hazard located? _____

_____

Has the hazard been reported to your employer? _____

If so, who was it reported to?_____

Briefly describe what's been done to correct the hazard

_____

_____

_____

Who took action to correct the hazard?

_____

_____

_____

1•800•4BE SAFE (1•800•423•7233)

Safety Meeting Minutes

Use with WAC 296-800-130 Safety Committees and Safety Meetings

This form can help you document the minutes of safety meetings in your workplace. This particular form isn't required, but shows the kind of information you need for your records. You can either copy this form or make your own.

Remember, you must:

- Keep meeting minutes for one year.
- Cover specific topics in your meetings.

Agenda:

Review of minutes of last safety meeting: Approved? ☐ **Yes** ☐ **No**

Corrections:_____

1. Unfinished business from last meeting:

_____

_____

2. Any hazards reported during this time period?

_____

_____

3. Describe any accident investigations conducted since last meeting. Did you identify and correct the cause of the unsafe situation(s)?

_____

_____

4. Is your accident and illness prevention program working? ☐ **Yes** ☐ **No**

If no, describe any recommendations to improve it.

_____

_____

5. What other safety-related topics did you cover in this meeting?

_____

_____

Safety Meeting Minutes

Use with WAC 296-800-130 Safety Committees and Safety Meetings

Employer: Worksite location:

_____

Date: _____ Meeting Start Time: _____ Meeting End Time: _____

Who attended this meeting?

_____

_____

_____

_____

_____

_____

_____

Minutes written by: **Meeting Leader:**

_____

Next meeting will be on (date): **Next meeting location:**

_____

How likely is an injury or illness to occur in your workplace? (check the box that best applies)

( ) very likely ( ) somewhat likely

( ) likely ( ) unlikely, we haven't had an on-the-job accident in years

How complex is your worksite? (check all boxes that apply)

( ) Large or spread out worksite (for example, a logging area)

( ) poorly planned building

( ) medium sized worksite

( ) small worksite

( ) 1 story building with plenty of exits and parking

Sample Hazardous Chemical Communication Program

A. Company Policy

_____ (Name of employer) is committed to the prevention of exposures that result in injury and/or illness; and to comply with all applicable state health and safety rules. To make sure that all affected employees know about information concerning the dangers of all hazardous chemicals used by _____ (Name of employer), the following hazardous information program has been established.

All work units of _____ (Name of employer) will participate in the hazard communication program. This written program will be available in _____ (Specify the location) for review by any interested employee.

B. Container Labeling

_____ (Name of person and position) is responsible for container labeling procedures, reviewing, and updating. The labeling system used at _____ (Name of employer) is as follows:

(Describe the labeling system, including the labels or other forms of warning used, and written alternatives to labeling, if any.)

_____

_____

_____

The procedures for proper labeling of all containers, and reviewing and updating label warnings are as follows:

(Also include a description of the procedures for labeling of secondary containers used, including making sure that they have the appropriate identification and hazard warning, etc.; description of procedures for reviewing and updating label warnings, how often the review is conducted, and the name of the person and position who is responsible for reviewing and updating label warnings.)

_____

_____

_____

It is the policy of _____ (Name of employer) that no container will be released for use until the above procedures are followed.

Sample Hazardous Chemical Communication Program

C. Material Safety Data Sheets (MSDS)

_____ is responsible to establish and monitor the employer's MSDS program. This person will make sure procedures are developed to obtain the necessary MSDSs and will review incoming MSDSs for new or significant health and safety information. This person will see that any new information is passed on to affected employees.
(Name of person and position)

The procedures to obtain MSDSs and review incoming MSDSs for new or significant health and safety information are as follows:

(Include procedures on how to make sure copies are current and updated, how any new information is passed on to affected employees, and the procedures for employee access in work areas.)

_____

_____

_____

Copies of MSDSs for all hazardous chemicals in use will be kept in _____ MSDSs will be available to all employees during each work shift. If an MSDS is not available or a new chemical in use does not have an MSDS, immediately contact _____ .
(Specify the location)
(The person and position)

Note:

If an alternative to printed Material Safety Data Sheets is used (such as computer data), provide a description of the format.

D. Employee Information and Training

_____ is responsible for the employer/employee training program.
(Name of person and position)

The procedures for how employees will be informed and trained are as follows:

(Include the methods used for general and site-specific training, and how employees will be informed when non-routine tasks arise. If your employees work at other employers' job sites, then specify where and how these employees will have access to MSDSs and labels, and how they will be informed of precautionary measures to take during normal or emergency operations, if any.)

_____

_____

_____

_____ will make sure that before starting work, each new employee of _____ will attend a health and safety orientation that includes information and training on the following:
(Name of person and position)
(Name of employer)

Sample Hazardous Chemical Communication Program

- An overview of the requirements contained in the Hazard Communication Standard.
- Hazardous chemicals present at his or her work places.
- Physical and health risks of the hazardous chemical.
- The symptoms of overexposure.
- How to determine the presence or release of hazardous chemicals in his or her work area.
- How to reduce or prevent exposure to hazardous chemicals through use of control procedures, work practices, and personal protective equipment.
- Steps the employer has taken to reduce or prevent exposure to hazardous chemicals.
- Procedures to follow if employees are overexposed to hazardous chemicals.
- How to read labels and review MSDSs to obtain hazard information.
- Location of the MSDS file and written hazard communication program.

Before introducing a new chemical hazard into any section of this employer, each employee in that section will be given information and training as outlined above for the new chemical.

E. Hazardous non-routine tasks

Periodically, employees are required to perform hazardous non-routine tasks. (Some examples of non-routine tasks are confined space entry, tank cleaning, and painting reactor vessels.) Non-routine tasks that are performed at _____ (Name of employer) include

1. _____
2. _____
3. _____

Prior to starting work on such projects, each affected employee will be given information by _____ (Name of person and position) about the hazardous chemicals he or she may encounter during these activities:

(For each activity, list the specific chemical hazards, protective and safety measures the employee can use, and the steps the employer has taken to reduce the hazards, including ventilation, respirators, presence of another employee, and emergency procedures.)

_____

_____

_____

Sample Hazardous Chemical Communication Program

F. Multi employer work places

It is the responsibility of _____ (Name of person and position) to provide employers of any other employees at the work site with the following information:

- Copies of MSDSs (or make them available at a central location) for any hazardous chemicals that the other employer(s)' employee may be exposed to while working.
- Inform other employers of any precautionary measures that need to be taken to protect employees during normal operating conditions or in foreseeable emergencies.
- Provide other employers with an explanation of the labeling system that is used at the work site.

It is also the responsibility of _____ (Name of person and position) to identify and obtain MSDSs for the chemicals the contractor is bringing into the work place.

G. List of hazardous chemicals

The following is a list of all known hazardous chemicals used by our employees. Further information on each chemical may be obtained by reviewing MSDSs located at _____ (Specify the location).

MSDS identity:

(Here is where you put the chemical list developed during the inventory. Arrange this list so that you are able to cross-reference it with your MSDS file and the labels on your containers.)

The criteria (e.g., label warnings, MSDS information, etc.) used to evaluate the chemicals are:

(Include a description of a plan for how you will update the list.)

Chemical Name	Manufacturer	Location Used

Sample Hazardous Chemical Communication Program

The sample labels on the following page show the type of information you must list on containers of hazardous chemicals. You can copy and use these labels or you can make your own.

Be sure your labels contain the following information:

- Name of Chemical
- Physical Hazards
- Health Hazards, Target Organs or Systems
- Optional information, such as Personal Protective Equipment or Safe Handling

After you've finished typing or writing in your information, print the labels. Then, cut out the individual labels and apply them to your hazardous chemical containers.

1•800•4BE SAFE (1•800•423•7233)

Sample Labels for Hazardous Chemical Containers

Use with WAC 296-800-170 Employer Chemical Hazard Communication

Name of Chemical or Common Name

Physical Hazards

Health Hazards, Target Organs or Systems

Optional Information, such as Personal Protective Equipment or Safe Handling

Name of Chemical or Common Name

Physical Hazards

Health Hazards, Target Organs or Systems

Optional Information, such as Personal Protective Equipment or Safe Handling

Name of Chemical or Common Name

Physical Hazards

Health Hazards, Target Organs or Systems

Optional Information, such as Personal Protective Equipment or Safe Handling

Name of Chemical or Common Name

Physical Hazards

Health Hazards, Target Organs or Systems

Optional Information, such as Personal Protective Equipment or Safe Handling

Name of Chemical or Common Name

Physical Hazards

Health Hazards, Target Organs or Systems

Optional Information, such as Personal Protective Equipment or Safe Handling

Name of Chemical or Common Name

Physical Hazards

Health Hazards, Target Organs or Systems

Optional Information, such as Personal Protective Equipment or Safe Handling

1•800•4BE SAFE (1•800•423•7233)

Sample Letter for Requesting a Material Safety Data Sheet (MSDS)

Use with WAC 296-800-170

This sample form letter shows what information you need to include when requesting Material Safety Data Sheets (MSDSs) from a manufacturer or distributor. You can use this sample as a guide to develop your own form letter.

Sample Form Letter

Date of your request
Name of manufacturer/distributor you need the MSDS from
Their address
City, state, zip code
Their fax number if you make this request by fax

Subject: Material Safety Data Sheet Request (MSDS)

Please send us the (MSDSs) for the following product(s):

(1)

(2)

(3)

Our business needs the MSDS(s) listed above to comply with the Chemical Hazard Communication Standard, WAC 296-800-170. Please make sure that the MSDS(s) you send us meet the requirements of the Content and distribution of Material safety data sheets (MSDSs) and label information, Chapter 296-839 WAC (equivalent to 29 CFR 1910.1200, OSHA Hazard Communication Standard).

Thank you for your immediate response.

Sincerely,

Your name
Your company's name
Business address

1•800•4BE SAFE (1•800•423•7233)

Training Documentation Form

WAC 296-800-140 Accident Prevention Program (recommended)
WAC 296-800-150 First Aid (recommended)
WAC 296-800-160 Personal Protective Equipment (PPE) (required)
WAC 296-800-170 Chemical Hazard Communication (recommended)
WAC 296-800-300 Portable Fire Extinguishers (recommended)

This sample form can help you verify in writing that each employee who needs training has received and understood it. You can copy this sample form or create your own.

( ) Accident Prevention Program, safety orientation

( ) Personal Protective Equipment Type:_____

( ) Chemical Hazard Communication

( ) First Aid

( ) Portable Fire Extinguishers

Date(s) of training: _____

List of employees who completed this training:

_____ _____
_____ _____
_____ _____
_____ _____
_____ _____
_____ _____
_____ _____

Trainer/Employer: _____

1•800•4BE SAFE (1•800•423•7233)

General Safety and Health Rules

Access to Records
Chapter 296-802 WAC

Air Contaminants (Specific)
Chapter296-62 WAC, Part I

Asbestos, Tremolite, Anthophyllite, and Actinolyte
Chapter 296-62, WAC Part I-1

Atmospheres, Ventilation
Chapter 296-62 WAC, Part L

Carcinogens
Chapter 296-62 WAC, Part F

Carcinogens (Specific)
Chapter 296-62 WAC, Part G

Coke Ovens
Chapter 296-62 WAC, Part O

Compressed Gas and Equipment
Chapter 296-24 WAC, Part K

Confined Spaces
Chapter 296-809 WAC

Content and Distribution of Material Safety Data Sheets (MSDSs) and Label Information
Chapter 296-839 WAC

Cotton Dust
Chapter 296-62 WAC, Part N

Dipping and Coating Operations (Dip Tanks)
Chapter 296-835 WAC

Electrical
Chapter 296-24 WAC, Part L

Emergency Response
Chapter 296-824 WAC

—Continued—

Resources

General Safety and Health Rules (Continued)

Fire Protection
Chapter 296- 24WAC, Part G.-2

Fire Suppression Equipment
Chapter 296-24 WAC, Part G-3

Hazardous Chemicals in Laboratories
Chapter 296-62 WAC, Part Q

Hazardous Materials, Flammable and Combustible Liquids, Spray Finishing
Chapter 296-24 WAC, Part E

Hazardous Waste Operations
Chapter 296-843 WAC

Hearing Loss Prevention (Noise)
Chapter 296-817 WAC

Helicopters Used as Lifting Machines
Chapter 296-829 WAC

Late Night Retail Worker Crime Prevention
Chapter 296-832 WAC

Machinery and Machine Guarding
Chapter 296-24 WAC, Part C
(After January 1, 2005 see Chapter 296-806 WAC)

Materials Handling and Storage, Including Cranes, Barracks, etc.
Chapter 296-24 WAC, Part D

Means of Egress
Chapter 296-24 WAC, Part G-1

Occupational Exposure to Bloodborne Pathogens
Chapter 296-823 WAC

Portable Power Tools
Chapter 296-807 WAC

Powered Platforms
Chapter 296-24 WAC, Part J-3

—Continued—

General Safety and Health Rules (Continued)

Respirators
Chapter 296-24 WAC, Part J-3

Respiratory Hazards
Chapter 296-841 WAC

Safe Practices of Abrasive Blasting Operations, Ventilation
Chapter 296-24 WAC, Part H-2

Safety Color Code for Working Physical Hazards, etc.
Chapter 296-24 WAC, Part B-2

Safety Procedures
Chapter 296-24 WAC, Part A-4
(After November 1, 2004 see Chapter 296-803 WAC)

Safety Standards for Window Cleaning
Chapter 296-878 WAC

Scaffolds
Chapter 296-874 WAC

Storage and Handling of Anhydrous Ammonia
Chapter 296-24 WAC, Part F-2

Storage and Handling of Liquefied Petroleum Gases
Chapter 296-24 WAC, Part F-1

Temporary Housing for Workers
Chapter 296-833 WAC

Trade Secrets
Chapter 296-62 WAC, Part B-1

Welding, Cutting and Brazing
Chapter 296-24 WAC, Part I

Working Services, Guarding Floors and Wall Openings, Ladders
Chapter 296-24 WAC, Part J-1

Resources

Chapter 296-155 WAC, Safety Rules for Construction Work

Concrete, Concrete Forms, Shoring, and Masonry Construction, Part O
Chapter 296-155-675 WAC

Cranes, Derricks, Hoists, Elevators, and Conveyors, Part L
Chapter 296-155-525 WAC

Demolition, Part S
Chapter 296-155-775 WAC

Electrical, Part I
Chapter 296-155-426 WAC

Excavation, Trenching, and Shoring, Part N
Chapter 296-155-650 WAC

Fall Restraint and Fall Arrest, Part C-1
Chapter 296-155-245 WAC

Fire Protection and Prevention, Part D
Chapter 296-155-250 WAC

Floor Openings, Wall Openings, and Stairways, Part K
Chapter 296-155-500 WAC

General Safety and Health Provisions, Part A
Chapter 296-155-001 WAC

Hazard Communication, Part B-2
Chapter 296-155-180 WAC

Material Handling, Storage, Use and Disposal, Part F
Chapter 296-155-325 WAC

Miscellaneous Construction Requirements, Part R
Chapter 296-155-755 WAC

Motor Vehicles, Mechanized Equipment, and Marine Operations, Part M
Chapter 296-155-600 WAC

Occupational Health and Environmental Control, Part B-1
Chapter 296-155-100 WAC

—Continued—

Chapter 296-155 WAC, Safety Rules for Construction Work (Continued)

Personal Protective and Lifesaving Equipment, Part C
Chapter 296-155-200 WAC

Power Distribution and Transmission Lines, Part U
See Chapter 296-45 WAC, Safety Standards for Electrical Workers

Rollover Protective Structures and Overhead Protection, Part V
Chapter 296-155-950 WAC

Scaffolds, Part J-1
Chapter 296-155-481 WAC

Signs, Signals, and Barricades, Part E
Chapter 296-155-300 WAC

Stairways and Ladders, Part J
Chapter 296-155-475 WAC

Steel Erection, Part P
Chapter 296-155-701 WAC

Tools, Hand and Power, Part G
Chapter 296-155-350 WAC

Underground Construction, Part Q
Chapter 296-155-725 WAC

Welding and Cutting, Part H
Chapter 296-155-400 WAC

Resources

Industry Specific Rules

Agriculture
Chapter 296-307 WAC

Asbestos Removal and Encapsulation
Chapter 296-65 WAC

Charter Boats
Chapter 296-115 WAC

Clearance Rules - Railroads in Private Yards and Plants
Chapter 296-28 WAC

Commercial Diving Operations
Chapter 296-37 WAC

Compressed Air Work
Chapter 296-36 WAC

Electrical Workers
Chapter 296-45 WAC

Explosives, Possession and Handling
Chapter 296-52 WAC

Fire Fighters
Chapter 296-305 WAC

Grain Handling Facilities
Chapter 296-99 WAC

Laundry Machinery and Operations
Chapter 296-303 WAC

Logging Operations
Chapter 296-54 WAC

Longshore, Stevedore and Related Waterfront Operations
Chapter 296-56 WAC

—Continued—

Industry Specific Rules (Continued)

Process Safety Management of Highly Hazardous Chemicals
Chapter 296-67 WAC

Pulp, Paper, and Paperboard Mills and Converters
Chapter 296-79 WAC

Railroad Clearances and Walkways in Private Rail Yards and Plants
Chapter 296-860 WAC

Right to Know Fee Assessment
Chapter 296-63 WAC

Sawmills and Woodworking Operations
Chapter 296-78 WAC

Ship Repairing, Shipbuilding and Shipbreaking
Chapter 296-304 WAC

Ski Area Facilities and Operations
Chapter 296-59 WAC

Telecommunications
Chapter 296-32 WAC

Textile Industry
Chapter 296-301 WAC

1•800•4BE SAFE (1•800•423•7233)

Links

ACGIH (American Conference of Governmental Industrial Hygienists)

http://www.acgih.org

1330 Kemper Meadow Dr. Ste 600
Cincinnati OH 45240
Phone: (513) 742-6163
Fax: (513) 742-3355

AIHA (American Industrial Hygiene Association)

http://www.aiha.org

2700 Prosperity Ave Ste. 250
Fairfax, VA 22031
Phone: (703) 849-8888
Fax: (703) 207-3561

ANSI (American National Standards Institute)

http://www.ansi.org

1819 L Street, NW
Washington, DC 20036
Phone: (202) 293-8020
Fax: (202) 293-9287

ASSE (American Society of Safety Engineers)

http://www.asse.org

1800 E. Oakton St.
Des Plains, IL 60018
Phone: (847) 699-2929
Fax: (847) 768-3434

Resources

Links

Australia's National Occupational Health and Safety Commission

http://www.worksafe.gov.au

GPO Box 58
Sydney NSW 2001
Australia
Phone: +61 2 9577 9555
Toll Free: 1-800-252-226
Fax: +61 2 9577 9202

Department of Environmental Health University of Washington

http://depts.washington.edu/envhlth/index.html

University of Washington
Box 357234
Seattle, WA 98195-7234
Phone: (206) 543-3199

Environmental Tobacco Smoke

http://www.lni.wa.gov/wisha/rules/corerules/HTML/296-800-240.htm

For information about environmental tobacco smoke in the workplace see WISHA

Evergreen Safety Council

http://www.esc.org

401 Pontius Ave.
Seattle WA 98109
Phone: (206) 382-4090
Toll Free: (800) 521-0778
Fax: (206) 382-0878

Guidelines for First Aid Training Curriculums 1-800-4BE SAFE (1-800-423-7233)

http://www.lni.wa.gov/wisha/ollearn/wpref.htm

Links

L&I (State of Washington Department of Labor and Industries)

Homepage:
http://www.lni.wa.gov

To find the L&I office nearest you:
http://www.wa.gov/lni/pa/direct.htm
1-800-4BE SAFE (1-800-423-7233)

L&I training opportunities:
WISHA - http://www.lni.wa.gov/Safety

NIOSH (National Institute for Occupational Safety & Health)

http://www.cdc.gov/niosh/homepage.html

4676 Columbia Parkway
Cincinnati, OH 45226-1998
Phone: (800) 356-4674

Northwest Center for Occupational Safety and Health Training

http://depts.washington.edu/envhlth/conted/ce/index.html

4225 Roosevelt Way NE, Ste. 100
Seattle, WA 98105
Phone: (206) 543-1069
Fax: (206) 685-3872

OSHA (Occupational Safety and Health Administration)

http://www.osha.gov

200 Constitution Ave. NW
Washington, DC 20210
Phone: (800) 321-6742

Region 10 Office
111 Third Ave. Suite 715
Seattle, WA 98101-3212

1•800•4BE SAFE (1•800•423•7233)

This list compares WISHA and OSHA requirements.

Safety & Health Core Rules	Code of Federal Regulations
Introduction WAC 296-800-100	None
Employer Responsibilities: Safe Workplace WAC 296-800-110	None
Employee Responsibilities WAC 296-800-120	None
Safety Committees and Safety Meetings WAC 296-800-130	None
Accident Prevention Program WAC 296-800-140	None
First Aid WAC 296-800-150	CFR 1910.151
Personal Protective Equipment (PPE) WAC 296-800-160	Personal Protective Equipment CFR 1910 Subpart I
Employer Chemical Hazard Communication WAC 296-800-170	Hazardous Materials CFR 1910.1200, 1201 Subpart H
Material Safety Data Sheets (MSDSs) as Exposure Records WAC 296-800-180	Hazardous Materials CFR 1910.1020 Subpart Z
Safety Bulletin Board WAC 296-800-190	None
WISHA Poster WAC 296-800-200	CFR 1903.2A1
Lighting WAC 296-800-210	None
Housekeeping, Drainage, & Storage WAC 296-800-220	Walking-Working Surfaces CFR 1910.22 Subpart D General Environmental Controls CFR 1910.141 Subpart J Materials Handling and Storage CFR 1910.176 Subpart N
Drinking Water, Bathrooms, Washing Facilities, & Waste Disposal WAC 296-800-230	General Environmental Controls CFR 1910.141 Subpart J
Environmental Tobacco Smoke in the Office WAC 296-800-240	None

Resources

This list compares WISHA and OSHA requirements.

Safety & Health Core Rules	Code of Federal Regulations
Stairs and Stair Railings WAC 296-800-250	Walking-Working Surfaces CFR 1910.24 Subpart D
Floor Openings, Floor Holes and Open-sided Floors WAC 296-800-260	Walking Working Surfaces CFR 1910.23 Subpart D
Workplace Structural Integrity WAC 296-800-270	Walking Working Surfaces CFR 1910.22 Subpart D
Electrical WAC 296-800-280	Electrical CFR 1910 Subpart S
Portable Ladders: Metal & Wooden WAC 296-800-290	Walking Working Surfaces CFR 1910 Subpart D
Portable Fire Extinguishers WAC 296-800-300	Fire Protection CFR 1910 Subpart L
Exit Routes & Employee Alarm Systems WAC 296-800-310	Means of Egress CFR 1910 Subpart E Fire Protection CFR 1910 Subpart L
Accident Reporting and Investigation WAC 296-800-320	Recording and Reporting Occupational Injuries and Illness CFR 1904.8
Releasing Accident Investigation Reports WAC 296-800-330	None
Protecting the Identity of the Source of Confidential Information WAC 296-800-340	None
WISHA Appeals, Penalties, and Procedural Rules WAC 296-800-350	Inspections, Citations, and Proposed Penalties CFR 1903
Using Standards from National Organizations and Federal Agencies WAC 296-800-360	None
Definitions WAC 296-800-370	None

Service Locations for L&I

Aberdeen

(360) 533-8200
FAX: (360) 533-8220
TDD: (360) 533-9336

Attention: Safety and Health
415 West Wishkah, Suite 1B
Aberdeen, WA 98520-4315

Bellevue

(425) 990-1400
FAX: (425) 990-1445
TDD: (425) 990-1450

Attention: Safety and Health
616 120th Avenue NE, Suite C201
Bellevue, WA 98005-3037

Bellingham

(360) 647-7300
FAX: 647-7310
TDD: (360) 647-7299

Attention: Safety and Health
1720 Ellis Street, Suite 200
Bellingham, WA 98225-4677

Bremerton

(360) 415-4000
FAX: (360) 415-4048
TDD: (360) 415-4014

Attention: Safety and Health
500 Pacific Avenue, Suite 400
Bremerton, WA 98337-1943

Colville

(509) 684-7417
Toll-free 1-800-509-9174
FAX (509) 684-7416

Attention: Safety and Health
298 South Main, Suite 203
Colville, WA 99114-2416

Note: There is no WISHA staff at this service location. If you would like to talk to a WISHA staff, please call the Spokane service location.

East Wenatchee

(509) 886-6500
FAX: (509) 886-6510
TDD: (509) 886-6512
Toll Free: 1-800-292-5920

Attention: Safety and Health
519 Grant Road
East Wenatchee, WA 98802-5459

Everett

(425) 290-1300
FAX: (425) 290-1399
TDD: (425) 290-1407

Attention: Safety and Health
729 100th St. S.E.
Everett WA 98208-3727

Resources

Service Locations for L&I

Kennewick

(509) 735-0100
FAX: (509) 735-0120
TDD: (509) 735-0146
Toll Free: 1-800-547-9411

Attention: Safety and Health
4310 W 24th Ave.
Kennewick, WA 99336

Longview

(360) 575-6900
FAX: (360) 575-6918
TDD: (360) 575-6921

Attention: Safety and Health
900 Ocean Beach Hwy
Longview, WA 98632-4013

Moses Lake

(509) 764-6900
FAX: (509) 764-6923
TDD: (509) 754-6030
Toll Free: 1-800-574-2285
(Eastern WA only)

Attention: Safety and Health
3001 W. Broadway Ave.
Moses Lake, WA 98837-2907

Mount Vernon

(360) 416-3000
FAX: (360) 416-3030
TDD: (360) 416-3072

Attention: Safety and Health
525 E College Way, Suite H
Mount Vernon, WA 98273-5500

Okanogan

(509) 826-7345
FAX: (509) 826-7349
TDD: (509) 826-7370
Toll Free: 1-800-942-4387
(Eastern WA only)

Attention: Safety and Health
1234 2nd Avenue S
Okanogan, WA 98840-9723

Port Angeles

(360) 417-2700
FAX: (360) 417-2733
TDD: (360) 417-2752

Attention: Safety and Health
1605 East Front Street, Suite C
Port Angeles, WA 98362-4628

Pullman

(509)334-5296
Toll-free 1-800-509-0025
FAX: (509) 334-3417

Attention: Safety and Health
1250 Bishop Blvd SE, Suite G
PO Box 847
Pullman, WA 99163-0847

Note: There is no WISHA staff at this service location. If you would like to talk to a WISHA staff, please call the Spokane service location.

Service Locations for L&I

Seattle

(206) 515-2800
FAX: (206) 515-2779
TDD: (206) 515-2803

Attention: Safety and Health
315 - 5th Ave S. Ste 200
Seattle, WA 98104-2607

Spokane

(509) 324-2687
Toll-free: 1-800-509-8847
FAX: (509) 324-2636
TDD: (509) 324-2653

Attention: Safety and Health
901 N Monroe Street, Suite 100
Spokane, WA 99201-2149

Tacoma

(253) 596-3868
FAX: (253) 596-3903
TDD: (253) 596-3887

Attention: Safety and Health
950 Broadway Suite 200
Tacoma, WA 98402-4453

Tukwila

(206) 835-1000
FAX: (206) 835-1099
TDD: (206) 835-1102

Attention: Safety and Health
PO Box 69050 (Mail only)
12806 Gateway Drive
(physical address only)
Seattle, WA 98168-1050

Tumwater

(360) 902-5799
FAX: (360) 902-5792
TDD: (360) 902-4637

Attention: Safety and Health
Mailing address: PO Box 44851
Olympia, WA 98504-4851

Physical address:
1st Floor, Lobby
7273 Linderson Way SW
Tumwater, WA 98501-5414

Please note: The physical address for our Tumwater building is not for U.S. Postal Service mail (unless specifically requested by USPS). Using this address may significantly delay delivery.

Resources

Service Locations for L&I

Vancouver

(360) 896-2300
FAX: (360) 896-2345
TDD: (360) 896-2304

Attention: Safety and Health
312 SE Stonemill Dr, Suite 120
Vancouver, WA 98684-3508

Walla Walla

(509) 527-4437
FAX: (509) 527-4486
TDD: (509) 527-4172

Attention: Safety and Health
1815 Portland Avenue, Suite 2
Walla Walla, WA 99362-2246

Yakima

(509) 454-3700
Toll-free 1-800-354-5423
FAX: (509) 454-3710
TDD: (509) 454-3741

Attention: Safety and Health
15 W. Yakima Avenue, Suite 100
Yakima, WA 98902-3480

Requesting Information

IF YOUR REQUESTING:	THEN:
An appeal of a WISHA Citation and Notice	**Mail requests to:** Department of Labor & Industries PO Box 44604 Olympia, Washington 98504-4604 **Fax requests to:** (360) 902-5581
Copies of a WISHA Citation and Notice	**Employee representatives** should mail form F418-023-000 (Request for copy of Citation and Notice) to: Department of Labor & Industries Public Disclosure PO Box 44600 Olympia, Washington 98504-4600 **Individual employees** should mail or fax their request to: Department of Labor & Industries Public Disclosure PO Box 44632 Olympia, Washington 98504-4632 **FAX:** (360) 902-5529
Material Safety Data Sheets (MSDSs)	**Mail requests to:** Department of Labor & Industries Right-to-Know Program PO Box 44610 Olympia, Washington 98504-4610
Inspection Reports	**Mail requests to:** Department of Labor & Industries PO Box 44632 Olympia, Washington 98504-4632

1•800•4BE SAFE (1•800•423•7233)

Index

A

Accidents

- accident/incident table, R–3
- confidentiality, 340–1, 330–1
- documentations, 320–6
- equipment, not moving, 320–3
- investigation report, R-1, 320–6, 330–1
- investigations, 320–5, 320–6
- reporting, 320–2

Accident Prevention Program (APP)

- development of, 140–2-3
- effectiveness in practice, 140–4-5
- elements of, 140–2
- hazardous gases and chemicals, 140–2
- injuries, 140–2
- safety and health program , 140–2-3
- safety committee, 140–2
- safety orientation, 140–2
- training program, 140–4
- written, 140–2-3

Alarm systems

- installing, maintaining, 310–12-14
- procedures for sounding, 310–14
- testing, 310–15
- exemptions, 310–12

Alcohol, prohibited from workplace, 110–4

Animals, as pests, 220–4

APP

- (see Accident Prevention Program)

Appeals

- corrective notices, 350–34
- notify employee, 350-35
- reassuming jurisdiction, 350–34
- requesting, 350–31-35
- (see also citation, civil penalties, and violations)

B

Bathrooms

- cleanliness, 230–8
- definition, 370–3
- number needed, 230–7-8
- providing, 230–7-8

Bees (see pests)

Biological agents, 110–6

- definition, 370–3

Birds, as pests, 220–4

Bulletin board, safety, 190–1

C

Change rooms 230-13

Chemical agents

- control of, 110–6
- definition, 370–4

Chemical containers, labeling, 170–13-16

Chemical hazard communication

- (see employer chemical hazard communication)

Chemical name, definition, 370–5

Citations and civil penalties

- adjustments, of penalties, 350–16
- appeals, 350–31-32
- base penalty adjustments, 350–16-17
- citation and notice, 350–8-9
- civil penalties, 350-11, 350-18
- copies, requesting of, 350–10
- corrections, 350–20-21
- employee request for, 350–10
- gravity, determining, 350–15
- inspections, 350–6-7, 350–9
- penalties, calculations, 350–12
- posting, 350–11

Index

probability rate determination, 350–14
Public Disclosure Unit, 350–9
reasons to assess, 350–11
repeat violations, 350–18
requesting more time, 350–26-27
severity, 350–12
violations, abated, 350–20
(see also, appeals, penalties, violations)

Cleaning
(see housekeeping, bathrooms)

Complaints, WISHA's response to, 350–8-9

Confidentiality
(see accidents)

Construction work, safety and health rules, R–31

D

Deaths
investigating incidents involving, 320–4
reporting, 320–2

Definitions, 370-1

Documentation
accident investigation, 320–6
hazard assessment for PPE, 160–4
hazard description form, R–17
PPE training, 160–8
safety meeting minutes, 130–3

Drainage, 220–5

Drinking water, potable (see water)

Drugs, prohibited, 110–4

E

Eating areas 230-9

Electrical
approved purposes, 280–5
other codes, 100-1
cords and cables, 280-11
covers and openings, 280–9
disconnecting means, 280–8
equipment, inspecting, 280–4
exemptions, 280–2
fittings, boxes, cabinets, outlets, 280–9-10
grounding, 280–18-20
guarding live parts, 280–16-17
marking, 280–7-8
outlets, 280–9-10
overcurrent protections, 280–22-23
receptacles, 280–5
safety inspections, 280–4
voltage, 280–4
wet locations, 280–6
working space, storage, clearance, 280–9-10
(see also flexible cords and cables)

Emergency telephone numbers, 150–3

Emergency washing facilities
Accessibility, 150-8
definition, 370-9
eyewashing, 150–5-6, 150–9
flushing equipment, supplemental, 150–9, 150-12
inspecting, 150–8
maintaining, 150–8
requirements, 150–5-7, 150-9
shower, 150–5
water, 150-12

Employee
accident prevention and, 140–2-3
complaints, 350–8-9
definition, 370–9
illness or injuries, reporting, 120–2

responsibilities, 120-1
rights and responsibilities, 120–1-2
safe practices of , 110-5, 120–1-2
workplace safety, 110-15, 120–1-2
(see also communication, employer chemical hazard)
Employer, definition, 370–10
Employer chemical hazard communication
access to records, 170–5-7
exemptions, 170–13, 16, 23-26
factory-sealed containers, 170–21
identify and list, 170-8
labeling, 170–13-16
laboratories, rules for, 170–20
multiemployer worksites, 170-6-7
MSDS, 170–9,12, 21
request, 170-22
training, 170–17-19
translation to other languages, 170–22
written, 170-5, 22
(see also Material Safety Data Sheets (MSDSs))
Environmental tobacco smoke
exemption, 240–2
from outside, 240–4
prohibiting, 240–2-3
smoking rooms, criteria, 240–2-3
ventilation, 240–3
Exits and exit routes
access to, 310–7
alarm system, 310-12-15
construction and repair, during, 310–11
construction requirements, 310–5
danger, minimizing, 310–9
dead ends, 310–7
doors, 310–7-8
emergency, 310–9
freezers and refrigerator rooms, 310–12
leading outside, 310–6
lighting of, 310–10
locking, 310–7
marking, 310–9
number of, 310–3
openings, 310–7
outdoor, 310–8
signs for, 310–9
size of, 310–4
Exposure records
definition, 370-10, 370-12
access to, 180–5-6
informing employees of, 180–4
MSDS, 180-1-7
preserving, 180–3
transferring, 180–7
Extension cords, 280–11-12
Extension ladder, 290–8-9
definition, 370–12
length, 290–8
overlap, 290–9
Extinguishers
(see fire extinguishers, portable)
Eye protection, 160–10-11
Eyewashing, 150–5-7, 8–9

F

Index

Face protection, 160–10

Facilities, washing, 230-9

- change room, 230-13
- lunchroom, 230-11

Fatalities, reporting, 320–2

Fire extinguishers, portable

- condition of, 300–5
- exemptions, 300–6
- inspection, 300–5-8
- location of, 300–5
- maintenance check, 300–5-8
- maintenance of, 300–5
- providing, 300–3
- selecting and distributing, 300–3-4
- testing of, 300–6-8
- training in use of, 300–9
- types, 300–4
- Uniform Fire Code (UFC), 300–4

Fire retardant paints, 310–10

First aid

- provider's roles and responsibilities, 150–1-9
- supplies, 150–4

Flexible cords and cables, 280–11-15

Floors

- holes and openings, 260–2-4
- load limits, 270–2-3
- open-sided floors or platforms, 260–5
- railings, 260–3-5
- safety, 270–2
- support of moving equipment, 270–3
- temporary openings, 260–3

Flotation devices

- (see personal flotation devices)

Food service, 230-10

Foot protection, 160–12-13

Foreman crew, 130

Forms, samples (see Helpful Tools)

G

Garbage containers, 230-10

Garbage, removal 230-11

General safety and health rules, R–28-29

Gloves (see hand protection)

Goggles, 160–10

Grounding, 280–18-20

H

Hand protection, 160–13

Hard hats (see Head Protection)

Harmful physical agent, definition, 370–17

Hazard assessment, 160–3

Hazards, 110-3

Hazardous chemicals (see employer chemical hazard communication)

Head protection, 160–11-12

Helpful tools

- Accident/Incident Table, R–5
- Accident Investigation Report, R–3-4
- Additional Program Requirements Table, R–6-8
- Employees Rights under WISHA, R–9
- Hazard Assessment Checklist, R–11-13
- Hazardous Chemical Communication Program, Sample, R–19-23
- Labels (sample) for Hazardous Chemical Containers, R–25
- Letter (sample) for requesting Material Safety Data Sheets (MSDS), R–27
- Report of a Workplace Hazard, R–15
- Safety Meeting Minutes, R–17-18
- Training Documentation Form, R–29

Hospitalization, reporting, 320–2
Housekeeping
cleaning, 220–3
drainage, 220-6
dust, minimizing, 220–3
floors, maintaining, 220–5
obstacles to, 220–3
pests, 220–4
proper drainage, 220–5-6
sanitary conditions and, 220–3
storage, 220–6
vegetation, 220-7

I

Illumination (see lighting)
Illustrations
clear distances, from live parts, 280–10
container, labeled, 170–13-16
disconnecting means, labeled, 280–8
electrical distances from live parts, 280–9-10
electrical outlet configurations, 280–5
electrical tool grounding, 280–18-20
electrical tool marking, 280–7
flexible cords, 280–12
guarded stairway opening, 260–3
hole cover, 260–4
labels, samples, 170–13-16
ladder angle, 290–6
ladder base, securing, 290–5
ladder top, securing, 290–5
live parts guarded by distance, 280–17
material storage, examples, 220–7
nonpotable water outlet, labeled, 230–5-6
opened and guarded floor, 260–5
polarity, normal and reverse, 280–20-21
stair components, 250–3
weatherproofed electrical equipment, 280–6
Imminent danger violation, 350–7
definition, 370–19
Industry specific rules (list of WACs), R–36-37
Insects (see pests)
Inspections
response to complaints, 350–8-9
techniques used during, 350–8
types of, 350–6-7
(see also citations and civil penalties)

L

Labor & Industries (L&I)
regional offices, R-45-48
service locations (regional offices), R45-48
(see also WISHA)
Labeling chemical containers, 170–13-16
Ladders, portable
exemption, 290–2
metal, 290–3
stepladders, 290–10
wooden, 290–7-10
Life vests (see personal flotation devices)
Lighting, 210–1-2
Links to other information, R–39-44

Index

M

Material Safety Data Sheets (MSDSs), 180–1
- accessible, 170–12, 180–5-6
- department, (Labor and Industries) access to, 180–5
- employees, informing of, 180–4
- exposure records, as 180–4
- factory-sealed chemicals, 170–21
- maintaining, 170–8-12, 180–3
- obtaining, 170–9-11
- preserving, 180–3, 180–7
- records, 180–5-6
- target organ information, 170–14
- (see also employer chemical hazard communication)

Means of egress (see exit routes)

Meetings, safety, 130–1-5

Metal ladders (see ladders)

Mice (see pests)

Minutes, safety meeting, 130–1-5

Mosquitoes (see pests)

N

Narcotics, use, prohibited, 110–4

O

On-the-job orientation, 140–2

Open-sided floors, 260–5

Occupational Safety and Health Administration (OSHA)
- definition, 370–22

Overcurrent, electrical protection of, 280–22-23

P

Penalties
- decrease in, 350–16-17
- minimum, 350–12
- base, 350–12
- severity rates, 350–12-13
- probability rate, 350–14
- reasons for, 350–11
- determining, 350–15
- maximum, 350–17
- increases in, 350–18-19
- abatement of, 350–20-22
- progress reports, 350–22-24

Personal flotation devices (PFD), 160–14-16

Personal protective equipment (PPE)
- ANSI standards, 160–10-11
- coast guard approved, 160–14-16
- condition of, 160–9
- definition, 160–3
- documentation, hazard assessment, 160–4
- drowning, protection from, 160–14-16
- employees, providing their own, 160–9
- employees, retraining, 160–7
- exemption, 160–2
- eye and face protection, 160–10-11
- fire hazards and, 160–12
- flammable liquids, for, 160–12
- flotation devices, 160–14
- foot protection, 160–12-13
- hair, 160–11-12
- hand protection, 160–13
- hard hats, 160–6
- hazard assessment, 160–3

head protection, 160–11-12
personal flotation devices (PFDs), 160–14-16
prescription lenses and, 160–6
protective helmets, 160–6, 11-12
providing to employees, 160–6, 11-12
required, when necessary, 160–8
selection of, 160–4-5
training employees, 160–7
training documentation, 160-8
when to use, 160–3
written certification of, 160–4

Pests, controlling, 220–4
PFDs (see personal flotation devices)
Plants (see vegetation)
Platforms, 260–5
Portable fire extinguishers, 300–1
Portable ladders, 290–1
Posters, WISHA, 200–1
Potable (see water)
Prescription drugs used in the workplace, 110–4
Programs
accident prevention, 140-1
chemical hazard Communication, 170–5-6
training, 140–4

R

Railings, 250–4-5, 260–2-4
Rats (see pests)
Reporting death or hospitalization, 320–2
Resource section
Complete List of Safety & Health Rules, R-31
Links to Other Information, R-39
OSHA/WISHA Rules Comparison, R-43
Service Locations for Labor &Industries, R-45
Requesting Information, R-49
(also see Helpful Tools)

Rodents (see pests)
Roofs, overloading, 270–2
Rules, effective in practice, 110–5

S

Safeguards, 110–3
Safety bulletin boards, 190–1
Safety committees, 130–1-5
conducting, 130–2-5
establishing, 130–2-3
minutes, 130–3

Safety meetings
crew, 130–2-5
orientation, 140–2-3

Safety plan, 140-1
Safety training, 140–4
Sealed containers, chemicals in, 170–21
Serious injury investigations, 350–7
Service locations, R–45
Shoes (see foot protection)
Showers, 230-12
Shower, emergency, 150-5-7
Single ladder, 290–8
definition, 370–29

Smoking, 240–1, 370–29
Squirrels (see pests)
Stairs
covers, 260–2-4
definitions, 370–30
exemptions, 250–1

Index

fixed, 250–2-3

handrails, 250–4-5

hazards minimized, 250–4

openings, 260-3

PPE, and, 250–3

provision of fixed, 250–2-3

railings, 250–4-5

winding, 250–2

Standards, national or federal, 360–1

Statutory authority, SA-1

Stepladders, 290–10

Storage, for safety, 220–6-7

Structural integrity, 270–1-3

T

Temporary floor openings, 260–3

Tobacco smoke, 240–1-4

Toilet facilities, 230–7-8

Toxic materials, 140–4

Training

chemical hazard, 170–17-19

first aid, 150–3-6

portable fire extinguishers, 300–2-7

programs, 140-4

PPE, 160–7

safety and health, 140–4

U

Urinal (see bathrooms)

V

Varmints (see pests)

Vegetation, controlling, 220–7

Vermin

(see pests)

Violations

abatement, 350-20, 350-23

citations for, 350–11

correction plan, 350–21-22

documentation, 350–21

failure to abate, 350–19

hearings, 350–29, 350-30

inform employee, 350-23, 350-31

late requests, 350–27

moveable equipment, involving, 350–16, 350–24-25

progress reports, 350-22

request more time, 350-26, 350-28

serious, 350–21

warning tags, 350–24-25

(see also appeals, penalties)

Volunteers, I–3

W

WACs, other, R-30

Washing facilities, 230–9

Washington Industrial Safety and Health Act (WISHA), 370–35

Wasps (see pests)

Water (potable)

containers, 230–3

definition, 230–5, 370–19

drinking (potable), 230–4-5

nonpotable, 230–5-6

shared cups and utensils, 230–4

Wooden ladders, 290–7

Work clothes, 230-13

Workplace, safe, 110–3-6

Statutory Authority

WAC

296-800-100 Introduction.

[Statutory Authority: RCW 49.17.010, [49.17].040, and [49.17].050 . 01-23-060 (Order 01-29), § 296-800-100, filed 11/20/01, effective 12/1/01; 01-11-038, § 296-800-100, filed 5/9/01, effective 9/1/01.]

296-800-110 Employer responsibilities: Safe workplace—Summary.

[Statutory Authority: RCW 49.17.010, 49.17.040, 49.17.050, and 49.17.060. 03-18-090 (Order 03-15), § 296-800-110, filed 9/2/03, effective 11/1/03. Statutory Authority: RCW 49.17.010, [49.17].040 , and [49.17].050. 02-16-047 (Order 02-02), § 296-800-110, filed 8/1/02, effective 10/1/02; 01-23-060 (Order 01-29), § 296-800-110, filed 11/20/01, effective 12/1/01; 01-11-038(Order 99-36), § 296-800-110, filed 5/9/01, effective 9/1/01.]

296-800-11005 Provide a workplace free from recognized hazards.

[Statutory Authority: RCW 49.17.010, [49.17].040, and [49.17].050 . 01-23-060 (Order 01-29), § 296-800-11005, filed 11/20/01, effective 12/1/01; 01-11-038 Order 99-36), § 296-800-11005, filed 5/9/01, effective 9/1/01.]

296-800-11010 Provide and use means to make your workplace safe.

[Statutory Authority: RCW 49.17.010, [49.17].040, and [49.17].050 . 01-11-038 (Order 99-36), § 296-800-11010, filed 5/9/01, effective 9/1/01.]

296-800-11015 Prohibit employees from entering, or being in, any workplace that is not safe.

[Statutory Authority: RCW 49.17.010, [49.17].040, and [49.17].050 . 01-11-038 (Order 99-36), § 296-800-11015, filed 5/9/01, effective 9/1/01.]

296-800-11020 Construct your workplace so it is safe.

[Statutory Authority: RCW 49.17.010, [49.17].040, and [49.17].050 . 01-23-060 Order 01-29), § 296-800-11020, filed 11/20/01, effective 12/1/01; 01-11-038 (Order 99-36), § 296-800-11020, filed 5/9/01, effective 9/1/01.]

296-800-11025 Prohibit alcohol and narcotics from your workplace.

[Statutory Authority: RCW 49.17.010, [49.17].040, and [49.17].050 . 01-11-038 (Order 99-36), § 296-800-11025, filed 5/9/01, effective 9/1/01.]

Statutory Authority

296-800-11030 Prohibit employees from using equipment or materials that do not meet the applicable WISHA requirements.

[Statutory Authority: RCW 49.17.010, 49.17.040, 49.17.050, and 49.17.060. 03-18-090 (Order 03-15), § 296-800-11030, filed 9/2/03, effective 11/1/03. Statutory Authority: RCW 49.17.010, [49.17].040 , and [49.17].050. 01-11-038 (Order 99-36), § 296-800-11030, filed 5/9/01, effective 9/1/01.]

296-800-11035 Establish, supervise, and enforce rules that lead to a safe and healthy work environment that are effective in practice.

[Statutory Authority: RCW 49.17.010, [49.17].040, and [49.17].050 . 01-11-038 (Order 99-36), § 296-800-11035, filed 5/9/01, effective 9/1/01.]

296-800-11040 Control chemical agents.

[Statutory Authority: RCW 49.17.010, [49.17].040, and [49.17].050 . 02-16-047 (Order 02-02), § 296-800-11040, filed 8/1/02, effective 10/1/02.]

296-800-11045 Protect employees from biological agents.

[Statutory Authority: RCW 49.17.010, [49.17].040, and [49.17].050 . 02-16-047 (Order 02-02), § 296-800-11045, filed 8/1/02, effective 10/1/02.]

296-800-120 Rule—Employee responsibilities.

[Statutory Authority: RCW 49.17.010, [49.17].040, and [49.17].050 . 01-23-060 (Order 01-29), § 296-800-120, filed 11/20/01, effective 12/1/01; 01-11-038 (Order 99-36), § 296-800-120, filed 5/9/01, effective 9/1/01.]

296-800-12005 Employee responsibilities.

[Statutory Authority: RCW 49.17.010, [49.17].040, and [49.17].050 . 01-23-060 (Order 01-29), § 296-800-12005, filed 11/20/01, effective 12/1/01; 01-11-038 (Order 99-36), § 296-800-12005, filed 5/9/01, effective 9/1/01.]

296-800-130 Safety committees and safety meetings—Summary.

[Statutory Authority: RCW 49.17.010, [49.17].040, and [49.17].050 . 02-16-047 (Order 02-02), § 296-800-130, filed 8/1/02, effective 10/1/02; 01-11-038 (Order 99-36), § 296-800-130, filed 5/9/01, effective 9/1/01.]

296-800-13020 Establish and conduct safety committees.

[Statutory Authority: RCW 49.17.010, [49.17].040, and [49.17].050 . 02-16-047 (Order 02-02), § 296-800-13020, filed 8/1/02, effective 10/1/02.]

296-800-13025 Follow these rules to conduct safety meetings.

[Statutory Authority: RCW 49.17.010, [49.17].040, and [49.17].050 . 02-16-047 (Order 02-02), § 296-800-13025, filed 8/1/02, effective 10/1/02.]

296-800-140 Accident prevention program.

[Statutory Authority: RCW 49.17.010, [49.17].040, and [49.17].050 . 01-11-038 (Order 99.39), § 296-800-140, filed 5/9/01, effective 9/1/01.]

296-800-14005 Develop a formal, written accident prevention program.

[Statutory Authority: RCW 49.17.010, [49.17].040, and [49.17].050 . 01-11-038 (Order 99-36), § 296-800-14005, filed 5/9/01, effective 9/1/01.]

296-800-14020 Develop, supervise, implement, and enforce safety and health training programs that are effective in practice.

[Statutory Authority: RCW 49.17.010, [49.17].040, and [49.17].050 . 01-11-038 (Order 99-36), § 296-800-14020, filed 5/9/01, effective 9/1/01.]

296-800-14025 Make sure your accident prevention program is effective in practice.

[Statutory Authority: RCW 49.17.010, [49.17].040, and [49.17].050 . 01-11-038 (Order 99-36), § 296-800-14025, filed 5/9/01, effective 9/1/01.]

296-800-150 Rule summary.

[Statutory Authority: RCW 49.17.010, [49.17].040, and[49.17].050 . RCW 49.17.010, [49.17].040, [49.17].050, [49.17].060, 04-07-160 (Order 03-31), § 296-800-150, filed 3/23/04, effective 5/1/04. 02-16-047 (Order 02-02), § 296-800-150, filed 8/1/02, effective 10/1/02; 01-11-038 (Order 99-36), § 296-800-150, filed 5/9/01, effective 9/1/01.]

Statutory Authority

296-800-15005 Make sure that first-aid trained personnel are available to provide quick and effective first-aid.

[Statutory Authority: RCW 49.17.010, 49.17.040, 49.17.050, and 49.17.060. 04-07-160 (Order 03-31), § 296-800-15005, filed 3/23/04, effective 5/1/04. 03-09-110 (Order 02-29), § 296-800-15005, filed 4/22/03, effective 8/1/03. Statutory Authority: RCW 49.17.010,[49.17].040 , and [49.17].050. 01-23-060 (Order 01-29), § 296-800-15005, filed 11/20/01, effective 12/1/01; 01-11-038 (Order 99-36), § 296-800-15005, filed 5/9/01, effective 9/1/01.]

296-800-15020 Make sure appropriate first-aid supplies are available.

[Statutory Authority: RCW 49.17.010, [49.17].040, and [49.17].050 . 01-11-038 (Order 99-36), § 296-800-15020, filed 5/9/01, effective 9/1/01.]

296-800-15030 Make sure emergency washing facilities are functional and readily available.

[Statutory Authority: RCW 49.17.010, [49.17].040, and [49.17].050 . 02-16-047 (Order 02-02), § 296-800-15030, filed 8/1/02, effective 10/1/02.]

296-800-15035 Inspect and activate your emergency washing facilities.

[Statutory Authority: RCW 49.17.010, [49.17].040, and [49.17].050 . 02-16-047 (Order 02-02), § 296-800-15035, filed 8/1/02, effective 10/1/02.]

296-800-15040 Make sure supplemental flushing equipment provides sufficient water.

[Statutory Authority: RCW 49.17.010, [49.17].040, and [49.17].050 . 02-16-047 (Order 02-02), § 296-800-15040, filed 8/1/02, effective 10/1/02.]

296-800-160 Personal Protective Equipment (PPE).

[Statutory Authority: RCW 49.17.010, [49.17].040, and [49.17].050 .05-03-093 § 296-800-160, filed 1/18/05, effective 3/1/05; 01-23-060 (Order 01-29), § 296-800-160, filed 11/20/01, effective 12/1/01; 01-11-038, § 296-800-160, filed 5/9/01, effective 9/1/01.]

296-800-16005 Do a hazard assessment for PPE.

[Statutory Authority: RCW 49.17.010, [49.17].040, and [49.17].050 . 01-11-038 (Order 99-36), § 296-800-16005, filed 5/9/01, effective 9/1/01.]

296-800-16010 Document your hazard assessment for PPE

[Statutory Authority: RCW 49.17.010, [49.17].040, and [49.17].050 . 01-11-038 (Order 99-36), § 296-800-16010, filed 5/9/01, effective 9/1/01.]

296-800-16015 Select appropriate PPE for your employees.

[Statutory Authority: RCW 49.17.010, [49.17].040, and [49.17].050 . 01-23-060 (Order 01-29), § 296-800-16015, filed 11/20/01, effective 12/1/01; 01-11-038 (Order 99-36), § 296-800-16015, filed 5/9/01, effective 9/1/01.]

296-800-16020 Provide PPE to your employees.

[Statutory Authority: RCW 49.17.010, [49.17].040, and [49.17].050 . 01-23-060 (Order 01-29), § 296-800-16020, filed 11/20/01, effective 12/1/01; 01-11-038 (Order 99-36), § 296-800-16020, filed 5/9/01, effective 9/1/01.]

296-800-16025 Train your employees to use PPE.

[Statutory Authority: RCW 49.17.010, [49.17].040, and [49.17].050 . 01-23-060 (Order 01-29), § 296-800-16025, filed 11/20/01, effective 12/1/01; 01-11-038 (Order 99-36), § 296-800-16025, filed 5/9/01, effective 9/1/01.]

296-800-16030 Retrain employees to use PPE, if necessary.

[Statutory Authority: RCW 49.17.010, [49.17].040, and [49.17].050 . 01-11-038 (Order 99-36), § 296-800-16030, filed 5/9/01, effective 9/1/01.]

296-800-16035 Document PPE training.

[Statutory Authority: RCW 49.17.010, [49.17].040, and [49.17].050 . 01-11-038 (Order 99-36), § 296-800-16035, filed 5/9/01, effective 9/1/01.]

296-800-16040 Require your employees to use necessary PPE on the job.

[Statutory Authority: RCW 49.17.010, [49.17].040, and [49.17].050 . 01-11-038 (Order 99-36), § 296-800-16040, filed 5/9/01, effective 9/1/01.]

296-800-16045 Keep PPE in a safe and good condition.

[Statutory Authority: RCW 49.17.010, [49.17].040, and [49.17].050 . 01-11-038 (Order 99-36), § 296-800-16045, filed 5/9/01, effective 9/1/01.]

Statutory Authority

296-800-16050 Make sure your employees use appropriate eye and face protection.

[Statutory Authority: RCW 49.17.010, [49.17].040, and [49.17].050 . 02-16-047 (Order 02-02), § 296-800-16050, filed 8/1/02, effective 10/1/02; 01-23-060 (Order 01-29), § 296-800-16050, filed 11/20/01, effective 12/1/01; 01-11-038 (Order 99-36), § 296-800-16050, filed 5/9/01, effective 9/1/01.]

296-800-16055 Make sure your employees use appropriate head protection.

[Statutory Authority: RCW 49.17.010, [49.17].040, and [49.17].050 . 01-11-038 (Order 99-36), § 296-800-16055, filed 5/9/01, effective 9/1/01.]

296-800-16060 Make sure your employees use appropriate foot protection.

[Statutory Authority: RCW 49.17.010, [49.17].040, and [49.17].050 . 01-11-038 (99-36), § 296-800-16060, filed 5/9/01, effective 9/1/01.]

296-800-16065 Make sure your employees use appropriate hand protection.

[Statutory Authority: RCW 49.17.010, [49.17].040, and [49.17].050 . 01-11-038 (Order 99-36), § 296-800-16065, filed 5/9/01, effective 9/1/01.]

296-800-16070 Make sure your employees are protected from drowning.

[Statutory Authority: RCW 49.17.010, [49.17].040, and [49.17].050 . 02-16-047 (Order 020-02), § 296-800-16070, filed 8/1/02, effective 10/1/02; 01-11-038 (Order 99-36), § 296-800-16070, filed 5/9/01, effective 9/1/01.]

296-800-170 Employer chemical hazard communication—Introduction.

[Statutory Authority: RCW 49.17.010, 49.17.040, 49.17.050, and 49.17.060. 03-18-090 (Order 03-15), § 296-800-170, filed 9/2/03, effective 11/1/03. Statutory Authority: RCW 49.17.010, [49.17].040 , and [49.17].050. 02-16-047 (Order 02-02), § 296-800-170, filed 8/1/02, effective 10/1/02; 01-23-060 (Order 01-29), § 296-800-170, filed 11/20/01, effective 12/1/01; 01-11-038 (Order 99-36), § 296-800-170, filed 5/9/01, effective 9/1/01.]

296-800-17005 Develop, implement, maintain, and make available a written Chemical Hazard Communication Program.

[Statutory Authority: RCW 49.17.010, 49.17.040, 49.17.050, and 49.17.060. 03-18-090 (Order 03-15), § 296-800-17005, filed 9/2/03, effective 11/1/03. Statutory Authority: RCW 49.17.010, [49.17].040 , and [49.17].050. 01-23-060 (Order 01-29), § 296-800-17005, filed 11/20/01, effective 12/1/01; 01-11-038 (Order 99-36), § 296-800-17005, filed 5/9/01, effective 9/1/01.]

296-800-17007 Include multiemployer workplaces in your program if necessary.

[Statutory Authority: RCW 49.17.010, 49.17.040, 49.17.050, and 49.17.060. 03-18-090 (Order 03-15), § 296-800-17007, filed 9/2/03, effective 11/1/03.]

296-800-17010 Identify and list all the hazardous chemicals present in your workplace.

[Statutory Authority: RCW 49.17.010, [49.17].040, and [49.17].050 . 01-23-060 (Order 01-29), § 296-800-17010, filed 11/20/01, effective 12/1/01; 01-11-038 (Order 99-36), § 296-800-17010, filed 5/9/01, effective 9/1/01.]

296-800-17015 Obtain and maintain material safety data sheets (MSDSs) for each hazardous chemical used.

[Statutory Authority: RCW 49.17.010, 49.17.040, 49.17.050, and 49.17.060. 03-18-090 (Order 03-15), § 296-800-17015, filed 9/2/03, effective 11/1/03. Statutory Authority: RCW 49.17.010, [49.17].040 , and [49.17].050. 01-23-060 (Order 01-29), § 296-800-17015, filed 11/20/01, effective 12/1/01; 01-11-038 (Order 99-36), § 296-800-17015, filed 5/9/01, effective 9/1/01.]

296-800-17020 Make sure MSDSs are readily accessible to your employees.

[Statutory Authority: RCW 49.17.010, 49.17.040, 49.17.050, and 49.17.060. 03-18-090 (Order 03-15), § 296-800-17020, filed 9/2/03, effective 11/1/03. Statutory Authority: RCW 49.17.010, [49.17].040 , and [49.17].050. 02-16-047 (Order 02-02), § 296-800-17020, filed 8/1/02, effective 10/1/02; 01-23-060 (Order 01-29), § 296-800-17020, filed 11/20/01, effective 12/1/01; 01-11-038 (Order 99-36), § 296-800-17020, filed 5/9/01, effective 9/1/01.]

Statutory Authority

296-800-17025 Label containers holding hazardous chemicals.

[Statutory Authority: RCW 49.17.010, [49.17].040, and [49.17].050 . 02-16-047 (Order 02-02), § 296-800-17025, filed 8/1/02, effective 10/1/02; 01-23-060 (Order 01-29), § 296-800-17025, filed 11/20/01, effective 12/1/01; 01-11-038 (Order 99-36), § 296-800-17025, filed 5/9/01, effective 9/1/01.]

296-800-17030 Inform and train your employees about hazardous chemicals in your workplace.

[Statutory Authority: RCW 49.17.010, [49.17].040, and [49.17].050 . 02-16-047(Order 02-02), § 296-800-17030, filed 8/1/02, effective 10/1/02; 01-23-060 (Order 01-29), § 296-800-17030, filed 11/20/01, effective 12/1/01; 01-11-038 (Order 99-36), § 296-800-17030, filed 5/9/01, effective 9/1/01.]

296-800-17035 Follow these rules for laboratories using hazardous chemicals.

[Statutory Authority: RCW 49.17.010, .040, .050, and .060. 06-02-060 (Order 05-19), § 296-800-17035, filed 01/03/06, effective 04/01/06. Statutory Authority: RCW 49.17.010, [49.17].040, and [49.17].050 . 01-23-060 (Order 01-29), § 296-800-17035, filed 11/20/01, effective 12/1/01; 01-11-038 (Order 99-36), § 296-800-17035, filed 5/9/01, effective 9/1/01.]

296-800-17040 Follow these rules for handling chemicals in factory-sealed containers.

[Statutory Authority: RCW 49.17.010, [49.17].040, and [49.17].050 . 01-23-060 (Order 01-29), § 296-800-17040, filed 11/20/01, effective 12/1/01; 01-11-038 (Order 99-36), § 296-800-17040, filed 5/9/01, effective 9/1/01.]

296-800-17045 Translate certain chemical hazard communication documents upon request.

[Statutory Authority: RCW 49.17.010, [49.17].040, and [49.17].050 . 01-11-038 (Order 99-36), § 296-800-17045, filed 5/9/01, effective 9/1/01.]

296-800-17050 Attempt to obtain a MSDS upon request.

[Statutory Authority: RCW 49.17.010, [49.17].040, and [49.17].050 . 01-11-038 (Order 99-36), § 296-800-17050, filed 5/9/01, effective 9/1/01.]

296-800-17055 Items or chemicals exempt from the rule, and exemptions from labeling.

[Statutory Authority: RCW 49.17.010, [49.17].040, and [49.17].050 . 01-11-038 (Order 99-36), § 296-800-17055, filed 5/9/01, effective 9/1/01.]

296-800-180 MSDSs as exposure records introduction.

[Statutory Authority: RCW 49.17.010, [49.17].040, and [49.17].050 . 01-23-060 (Order 01-29), § 296-800-180, filed 11/20/01, effective 12/1/01; 01-11-038 (Order 99-36), § 296-800-180, filed 5/9/01, effective 9/1/01.]

296-800-18005 Preserve exposure records for at least 30 years.

[Statutory Authority: RCW 49.17.010, [49.17].040, and [49.17].050 . 01-11-038 (Order 99-36), § 296-800-18005, filed 5/9/01, effective 9/1/01.]

296-800-18010 Inform current employees of exposure records.

[Statutory Authority: RCW 49.17.010, [49.17].040, and [49.17].050 . 02-16-047 (Order 02-02), § 296-800-18010, filed 8/1/02, effective 10/1/02; 01-11-038 (Order 99-36), § 296-800-18010, filed 5/9/01, effective 9/1/01.]

296-800-18015 Provide access to exposure records.

[Statutory Authority: RCW 49.17.010, [49.17].040, and [49.17].050 . 02-16-047 (Order 02-02), § 296-800-18015, filed 8/1/02, effective 10/1/02; 01-23-060 (Order 01-29), § 296-800-18015, filed 11/20/01, effective 12/1/01; 01-11-038 (Order 99-36), § 296-800-18015, filed 5/9/01, effective 9/1/01.]

296-800-18020 Transfer records when ceasing to do business.

[Statutory Authority: RCW 49.17.010, [49.17].040, and [49.17].050 . 01-23-060 (Order 01-29), § 296-800-18020, filed 11/20/01, effective 12/1/01; 01-11-038 (Order 99-36), § 296-800-18020, filed 5/9/01, effective 9/1/01.]

296-800-190 Summary/rule.

[Statutory Authority: RCW 49.17.010, [49.17].040, and [49.17].050 . 01-11-038 (Order 99-36), § 296-800-190, filed 5/9/01, effective 9/1/01.]

296-800-19005 Provide a safety bulletin board in your workplace.

[Statutory Authority: RCW 49.17.010, [49.17].040, and [49.17].050 . 01-11-038 (Order 99-36), § 296-800-19005, filed 5/9/01, effective 9/1/01.]

Statutory Authority

296-800-200 WISHA poster.

[Statutory Authority: RCW 49.17.010, [49.17].040, and [49.17].050 . 01-11-038 (Order 99-36), § 296-800-200, filed 5/9/01, effective 9/1/01.]

296-800-20005 Post and keep a WISHA poster in your workplace.

[Statutory Authority: RCW 49.17.010, [49.17].040, and [49.17].050 . 02-16-047 (Order 02-02), § 296-800-20005, filed 8/1/02, effective 10/1/02; 01-23-060 (Order 01-29), § 296-800-20005, filed 11/20/01, effective 12/1/01; 01-11-038 (Order 99-36), § 296-800-20005, filed 5/9/01, effective 9/1/01.]

296-800-210 Lighting.

[Statutory Authority: RCW 49.17.010, [49.17].040, and [49.17].050 . 01-11-038 (Order 99-36), § 296-800-210, filed 5/9/01, effective 9/1/01.]

296-800-21005 Provide and maintain adequate lighting.

[Statutory Authority: RCW 49.17.010, [49.17].040, and [49.17].050 . 01-23-060 (Order 01-29), § 296-800-21005, filed 11/20/01, effective 12/1/01; 01-11-038 (Order 99-36), § 296-800-21005, filed 5/9/01, effective 9/1/01.]

296-880-220 Housekeeping, drainage, and storage—Summary.

[Statutory Authority: RCW 49.17.010, [49.17].040, and [49.17].050 . 01-11-038 (Order 99-36), § 296-800-220, filed 5/9/01, effective 9/1/01.]

296-800-22005 Keep your workplace clean.

[Statutory Authority: RCW 49.17.010, [49.17].040, and [49.17].050 . 01-11-038 (Order 99-36), § 296-800-22005, filed 5/9/01, effective 9/1/01.]

296-800-22010 Sweep and clean your workplace to minimize dust.

[Statutory Authority: RCW 49.17.010, [49.17].040, and [49.17].050 . 01-11-038 (Order 99-36), § 296-800-22010, filed 5/9/01, effective 9/1/01.]

296-800-22015 Keep your workplace free of obstacles that interfere with cleaning.

[Statutory Authority: RCW 49.17.010, [49.17].040, and [49.17].050 . 01-11-038 (Order 99-36), § 296-800-22015, filed 5/9/01, effective 9/1/01.]

296-800-22020 Control pests in your workplace.

[Statutory Authority: RCW 49.17.010, [49.17].040, and [49.17].050 . 01-23-060 (Order 01-29), § 296-800-22020, filed 11/20/01, effective 12/1/01; 01-11-038 (Order 99-36), § 296-800-22020, filed 5/9/01, effective 9/1/01.]

296-800-22022 Make sure floors are maintained in a safe condition.

[Statutory Authority: RCW 49.17.010, [49.17].040, and [49.17].050 . 01-11-038 (Order 99-36), § 296-800-22022, filed 5/9/01, effective 9/1/01.]

296-800-22025 Keep your workroom floors dry, when practical.

[Statutory Authority: RCW 49.17.010, [49.17].040, and [49.17].050 . 01-11-038 (Order 99-36), § 296-800-22025, filed 5/9/01, effective 9/1/01.]

296-800-22030 Provide proper drainage.

[Statutory Authority: RCW 49.17.010, [49.17].040, and [49.17].050 . 01-11-038 (Order 99-36), § 296-800-22030, filed 5/9/01, effective 9/1/01.]

296-800-22035 Store things safely.

[Statutory Authority: RCW 49.17.010, [49.17].040, and [49.17].050 . 01-11-038 (Order 99-36), § 296-800-22035, filed 5/9/01, effective 9/1/01.]

296-800-22040 Control vegetation in your storage areas.

[Statutory Authority: RCW 49.17.010, [49.17].040, and [49.17].050 . 01-11-038 (Order 99-36), § 296-800-22040, filed 5/9/01, effective 9/1/01.]

296-800-230 Summary.

[Statutory Authority: RCW 49.17.010, 49.17.040, 49.17.050, and 49.17.060. 03-18-090 (Order 03-15), § 296-800-230, filed 9/2/03, effective 11/1/03. Statutory Authority: RCW 49.17.010, [49.17].040 , and [49.17].050. 01-23-060 (Order 01-29), § 296-800-230, filed 11/20/01, effective 12/1/01; 01-11-038 (Order 99-36), § 296-800-230, filed 5/9/01, effective 9/1/01.]

296-800-23005 Provide safe drinking (potable) water in your workplace.

[Statutory Authority: RCW 49.17.010, 49.17.040, 49.17.050, and 49.17.060. 03-18-090 (Order 03-15), § 296-800-23005, filed 9/2/03, effective 11/1/03. Statutory Authority: RCW 49.17.010, [49.17].040 , and [49.17].050. 01-23-060 (Order 01-29), § 296-800-23005, filed 11/20/01, effective 12/1/01; 01-11-038 (Order 99-36), § 296-800-23005, filed 5/9/01, effective 9/1/01.]

296-800-23010 Clearly mark the water outlets that are not fit for drinking (nonpotable).

[Statutory Authority: RCW 49.17.010, 49.17.040, 49.17.050, and 49.17.060. 03-18-090 (Order 03-15), § 296-800-23010, filed 9/2/03, effective 11/1/03. Statutory Authority: RCW 49.17.010, [49.17].040 , and [49.17].050. 02-16-047 (Order 02-02), § 296-800-23010, filed 8/1/02, effective 10/1/02; 01-23-060 (Order 01-29), § 296-800-23010, filed 11/20/01, effective 12/1/01; 01-11-038 (Order 99-36), § 296-800-23010, filed 5/9/01, effective 9/1/01.]

296-800-23015 Make sure that systems delivering not-fit-for-drinking (nonpotable) water prevents backflow into drinking water systems.

[Statutory Authority: RCW 49.17.010, [49.17].040, and [49.17].050 . 01-11-038 (Order 99-36), § 296-800-23015, filed 5/9/01, effective 9/1/01.]

296-800-23020 Provide bathrooms for your employees.

[Statutory Authority: RCW 49.17.010, 49.17.040, 49.17.050, and 49.17.060. 03-18-090 (Order 03-15), § 296-800-23020, filed 9/2/03, effective 11/1/03. Statutory Authority: RCW 49.17.010, [49.17].040 , and [49.17].050. 02-16-047 (Order 02-02), § 296-800-23020, filed 8/1/02, effective 10/1/02; 01-11-038 (Order 99-36), § 296-800-23020, filed 5/9/01, effective 9/1/01.]

296-800-23025 Provide convenient, clean washing facilities.

[Statutory Authority: RCW 49.17.010, 49.17.040, 49.17.050, and 49.17.060. 03-18-090 (Order 03-15), § 296-800-23025, filed 9/2/03, effective 11/1/03. Statutory Authority: RCW 49.17.010, [49.17].040 , and [49.17].050. 01-23-060 (Order 01-29), § 296-800-23025, filed 11/20/01, effective 12/1/01; 01-11-038 (Order 99-36), § 296-800-23025, filed 5/9/01, effective 9/1/01.]

296-800-23040 Make sure eating areas are safe and healthy.

[Statutory Authority: RCW 49.17.010, 49.17.040, 49.17.050, and 49.17.060. 03-18-090 (Order 03-15), § 296-800-23040, filed 9/2/03, effective 11/1/03.]

296-800-23045 Follow these requirements if you provide food service to your employees.

[Statutory Authority: RCW 49.17.010, 49.17.040, 49.17.050, and 49.17.060. 03-18-090 (Order 03-15), § 296-800-23045, filed 9/2/03, effective 11/1/03.]

296-800-23050 Dispose of garbage and waste safely.

[Statutory Authority: RCW 49.17.010, 49.17.040, 49.17.050, and 49.17.060. 03-18-090 (Order 03-15), § 296-800-23050, filed 9/2/03, effective 11/1/03.]

296-800-23055 Remove garbage and waste in a way that does not create a health hazard.

[Statutory Authority: RCW 49.17.010, 49.17.040, 49.17.050, and 49.17.060. 03-18-090 (Order 03-15), § 296-800-23055, filed 9/2/03, effective 11/1/03.]

296-800-23060 Provide a separate lunchroom if employees are exposed to toxic substances if they are allowed to eat and drink on the job site.

[Statutory Authority: RCW 49.17.010, 49.17.040, 49.17.050, and 49.17.060. 03-18-090 (Order 03-15), § 296-800-23060, filed 9/2/03, effective 11/1/03.]

296-800-23065 Provide showers when required for employees working with chemicals.

[Statutory Authority: RCW 49.17.010, 49.17.040, 49.17.050, and 49.17.060. 03-18-090 (Order 03-15), § 296-800-23065, filed 9/2/03, effective 11/1/03.]

296-800-23070 Provide change rooms when required.

[Statutory Authority: RCW 49.17.010, 49.17.040, 49.17.050, and 49.17.060. 03-18-090 (Order 03-15), § 296-800-23070, filed 9/2/03, effective 11/1/03.]

296-800-23075 Make sure any work clothes you provide are dry.

[Statutory Authority: RCW 49.17.010, 49.17.040, 49.17.050, and 49.17.060. 03-18-090 (Order 03-15), § 296-800-23075, filed 9/2/03, effective 11/1/03.]

296-800-240 Summary.

[Statutory Authority: RCW 49.17.010, [49.17].040, and [49.17].050 . 01-11-038 (Order 99-36), § 296-800-240, filed 5/9/01, effective 9/1/01.]

296-800-24005 Control tobacco smoke in your building.

[Statutory Authority: RCW 49.17.010, [49.17].040, and [49.17].050 . 01-11-038 (Order 99-36), § 296-800-24005, filed 5/9/01, effective 9/1/01.]

Statutory Authority

296-800-24010 Control tobacco smoke that come in from the outside.

[Statutory Authority: RCW 49.17.010, [49.17].040, and [49.17].050 . 01-23-060 (Order 01-29), § 296-800-24010, filed 11/20/01, effective 12/1/01; 01-11-038 (Order 99-36), § 296-800-24010, filed 5/9/01, effective 9/1/01.]

296-800-250 Summary.

[Statutory Authority: RCW 49.17.010, [49.17].040, and [49.17].050 . 01-23-060 (Order 01-29), § 296-800-250, filed 11/20/01, effective 12/1/01; 01-11-038 (Order 99-36), § 296-800-250, filed 5/9/01, effective 9/1/01.]

296-800-25005 Provide fixed stairs where required.

[Statutory Authority: RCW 49.17.010, [49.17].040, and [49.17].050 . 01-23-060 (Order 01-29), § 296-800-25005, filed 11/20/01, effective 12/1/01; 01-11-038 (Order 99-36), § 296-800-25005, filed 5/9/01, effective 9/1/01.]

296-800-25010 Provide stairs that minimize hazards.

[Statutory Authority: RCW 49.17.010, [49.17].040, and [49.17].050 . 01-11-038 (Order 99-36), § 296-800-25010, filed 5/9/01, effective 9/1/01.]

296-800-25015 Provide handrails and stair railings.

[Statutory Authority: RCW 49.17.010, [49.17].040, and [49.17].050 . 02-16-047 (Order 02-02), § 296-800-25015, filed 8/1/02, effective 10/1/02; 01-23-060 (Order 01-29), § 296-800-25015, filed 11/20/01, effective 12/1/01; 01-11-038 (Order 99-36), § 296-800-25015, filed 5/9/01, effective 9/1/01.]

296-800-260 Summary.

[Statutory Authority: RCW 49.17.010, [49.17].040, and [49.17].050 . 01-11-038 (Order 99-36), § 296-800-260, filed 5/9/01, effective 9/1/01.]

296-800-26005 Guard or cover floor openings and floor holes.

[Statutory Authority: RCW 49.17.010, [49.17].040, and [49.17].050 . 01-11-038 (Order 99-36), § 296-800-26005, filed 5/9/01, effective 9/1/01.]

296-800-26010 Protect open-sided floors and platforms.

[Statutory Authority: RCW 49.17.010, [49.17].040, and [49.17].050 . 01-23-060 (Order 01-29), § 296-800-26010, filed 11/20/01, effective 12/1/01; 01-11-038 (Order 99-36), § 296-800-26010, filed 5/9/01, effective 9/1/01.]

296-800-270 Summary.

[Statutory Authority: RCW 49.17.010, [49.17].040, and [49.17].050 . 01-11-038 (Order 99-36), § 296-800-270, filed 5/9/01, effective 9/1/01.]

296-800-27005 Do not overload floors or roofs.

[Statutory Authority: RCW 49.17.010, [49.17].040, and [49.17].050 . 01-11-038 (Order 99-36), § 296-800-27005, filed 5/9/01, effective 9/1/01.]

296-800-27010 Make sure the floors are safe.

[Statutory Authority: RCW 49.17.010, [49.17].040, and [49.17].050 . 01-11-038 (Order 99-36), § 296-800-27010, filed 5/9/01, effective 9/1/01.]

296-800-27015 Make sure floors can support equipment that moves or has motion.

[Statutory Authority: RCW 49.17.010, [49.17].040, and [49.17].050 . 01-11-038 (Order 99-36), § 296-800-27015, filed 5/9/01, effective 9/1/01.]

296-800-27020 Post approved load limits (weight limits) for floors.

[Statutory Authority: RCW 49.17.010, [49.17].040, and [49.17].050 . 01-23-060 (Order 01-29), § 296-800-27020, filed 11/20/01, effective 12/1/01; 01-11-038 (Order 99-36), § 296-800-27020, filed 5/9/01, effective 9/1/01.]

296-800-280 Basic electric rules.

[Statutory Authority: RCW 49.17.010, [49.17].040, and [49.17].050 . 01-23-060 (Order 01-29), § 296-800-280, filed 11/20/01, effective 12/1/01; 01-11-038 (Order 99-36), § 296-800-280, filed 5/9/01, effective 9/1/01.]

296-800-28005 Inspect all electrical equipment your employees use to make sure the equipment is safe.

[Statutory Authority: RCW 49.17.010, [49.17].040, and [49.17].050 . 01-23-060 (Order 01-29), § 296-800-28005, filed 11/20/01, effective 12/1/01; 01-11-038 (Order 99-36), § 296-800-28005, filed 5/9/01, effective 9/1/01.]

296-800-28010 Make sure all electrical equipment is used for its approved or listed purpose.

[Statutory Authority: RCW 49.17.010, [49.17].040, and [49.17].050 . 01-23-060 (Order 01-29), § 296-800-28010, filed 11/20/01, effective 12/1/01; 01-11-038 (Order 99-36), § 296-800-28010, filed 5/9/01, effective 9/1/01.]

Statutory Authority

296-800-28015 Make sure electrical equipment used or located in wet or damp locations is designed for such use.

[Statutory Authority: RCW 49.17.010, [49.17].040, and [49.17].050 . 01-11-038 (Order 99-36), § 296-800-28015, filed 5/9/01, effective 9/1/01.]

296-800-28020 Make sure electrical equipment that is not marked is not used.

[Statutory Authority: RCW 49.17.010, [49.17].040, and [49.17].050 . 01-23-060 (Order 01-29), § 296-800-28020, filed 11/20/01, effective 12/1/01; 01-11-038 (Order 99-36), § 296-800-28020, filed 5/9/01, effective 9/1/01.]

296-800-28022 Identify disconnecting means.

[Statutory Authority: RCW 49.17.010, [49.17].040, and [49.17].050 . 01-11-038 (Order 99-36), § 296-800-28022, filed 5/9/01, effective 9/1/01.]

296-800-28025 Maintain electrical fittings, boxes, cabinets, and outlets in good condition.

[Statutory Authority: RCW 49.17.010, [49.17].040, and [49.17].050 . 01-23-060 (Order 01-29), § 296-800-28025, filed 11/20/01, effective 12/1/01; 01-11-038 (Order 99-36), § 296-800-28025, filed 5/9/01, effective 9/1/01.]

296-800-28030 Maintain all flexible cords and cables in good condition and use safely.

[Statutory Authority: RCW 49.17.010, [49.17].040, and [49.17].050 . 01-23-060 (Order 01-29), § 296-800-28030, filed 11/20/01, effective 12/1/01; 01-11-038 (Order 99-36), § 296-800-28030, filed 5/9/01, effective 9/1/01.]

296-800-28035 Guard electrical equipment to prevent your employees from electrical hazards.

[Statutory Authority: RCW 49.17.010, [49.17].040, and [49.17].050 . 01-11-038 (Order 99-36), § 296-800-28035, filed 5/9/01, effective 9/1/01.]

296-800-28040 Make sure electrical equipment is effectively grounded.

[Statutory Authority: RCW 49.17.010, [49.17].040, and [49.17].050 . 02-16-047 (Order 02-02), § 296-800-28040, filed 8/1/02, effective 10/1/02; 01-23-060 (Order 01-29), § 296-800-28040, filed 11/20/01, effective 12/1/01; 01-11-038 (Order 99-36), § 296-800-28040, filed 5/9/01, effective 9/1/01.]

296-800-28045 Make sure electrical equipment has overcurrent protection.

[Statutory Authority: RCW 49.17.010, [49.17].040, and [49.17].050 . 02-16-047 (Order 02-02), § 296-800-28045, filed 8/1/02, effective 10/1/02; 01-11-038 (Order 99-36), § 296-800-28045, filed 5/9/01, effective 9/1/01.]

296-800-290 Summary.

[Statutory Authority: RCW 49.17.010, [49.17].040, and [49.17].050 . 01-11-038 (Order 99-36), § 296-800-290, filed 5/9/01, effective 9/1/01.]

296-800-29005 Inspect your portable metal ladders periodically.

[Statutory Authority: RCW 49.17.010, [49.17].040, and [49.17].050 . 01-11-038 (Order 99-36) , § 296-800-29005, filed 5/9/01, effective 9/1/01.]

296-800-29010 Make sure your portable metal ladders are kept ingood condition.

[Statutory Authority: RCW 49.17.010, [49.17].040, and [49.17].050 . 01-11-038 (Order 99-36), § 296-800-29010, filed 5/9/01, effective 9/1/01.]

296-800-29015 Use your portable metal ladders safely.

[Statutory Authority: RCW 49.17.010, [49.17].040, and [49.17].050 . 01-23-060 (Order 01-29), § 296-800-29015, filed 11/20/01, effective 12/1/01; 01-11-038 (Order 99-36), § 296-800-29015, filed 5/9/01, effective 9/1/01.]

296-800-29020 Inspect your portable wooden ladders frequently.

[Statutory Authority: RCW 49.17.010, [49.17].040, and [49.17].050 . 01-11-038 (Order 99-36), § 296-800-29020, filed 5/9/01, effective 9/1/01.]

296-800-29025 Make sure your portable wooden ladders are kept in good condition.

[Statutory Authority: RCW 49.17.010, [49.17].040, and [49.17].050 . 01-23-060 (Order 01-29), § 296-800-29025, filed 11/20/01, effective 12/1/01; 01-11-038 (Order 99-36), § 296-800-29025, filed 5/9/01, effective 9/1/01.]

296-800-29030 Use your portable wooden ladders safely and for their intended purpose.

[Statutory Authority: RCW 49.17.010, [49.17].040, and [49.17].050 . 01-23-060 (Order 01-29), § 296-800-29030, filed 11/20/01, effective 12/1/01; 01-11-038 (Order 99-36), § 296-800-29030, filed 5/9/01, effective 9/1/01.]

Statutory Authority

296-800-29035 Safely use a portable wooden ladder when working more than 25 feet above ground.

[Statutory Authority: RCW 49.17.010, [49.17].040, and [49.17].050 . 01-11-038 (Order 99-36), § 296-800-29035, filed 5/9/01, effective 9/1/01.]

296-800-29040 Use wooden stepladders safely.

[Statutory Authority: RCW 49.17.010, [49.17].040, and [49.17].050 . 01-11-038 (Order 99-36), § 296-800-29040, filed 5/9/01, effective 9/1/01.]

296-800-300 Summary—Portable fire extinguishers.

[Statutory Authority: RCW 49.17.010, [49.17].040, and [49.17].050 . 01-23-060 (Order 01-29), § 296-800-300, filed 11/20/01, effective 12/1/01; 01-11-038 (Order 99-36), § 296-800-300, filed 5/9/01, effective 9/1/01.]

296-800-30005 Provide portable fire extinguishers in your workplace.

[Statutory Authority: RCW 49.17.010, [49.17].040, and [49.17].050 . 01-11-038 (Order 99-36), § 296-800-30005, filed 5/9/01, effective 9/1/01.]

296-800-30010 Select and distribute portable fire extinguishers in your workplace.

[Statutory Authority: RCW 49.17.010, [49.17].040, and [49.17].050 . 01-23-060 (Order 01-29), § 296-800-30010, filed 11/20/01, effective 12/1/01; 01-11-038 (Order 99-36), § 296-800-30010, filed 5/9/01, effective 9/1/01.]

296-800-30015 Make sure that portable fire extinguishers are kept fully charged, in operable condition, and left in their designated places.

[Statutory Authority: RCW 49.17.010, [49.17].040, and [49.17].050 . 01-11-038 (Order 99-36), § 296-800-30015, filed 5/9/01, effective 9/1/01.]

296-800-30020 Inspect and test all portable fire extinguishers.

[Statutory Authority: RCW 49.17.010, [49.17].040, and [49.17].050 . 01-23-060 (Order 01-29), § 296-800-30020, filed 11/20/01, effective 12/1/01; 01-11-038, § 296-800-30020, filed 5/9/01, effective 9/1/01.]

296-800-30025 Train your employees to use portable fire extinguishers.

[Statutory Authority: RCW 49.17.010, [49.17].040, and [49.17].050 . 01-11-038 (Order 99-36), § 296-800-30025, filed 5/9/01, effective 9/1/01.]

296-800-310 Summary.

[Statutory Authority: RCW 49.17.010, [49.17].040, and [49.17].050 . 01-23-060 (Order 01-29), § 296-800-310, filed 11/20/01, effective 12/1/01; 01-11-038, § 296-800-310, filed 5/9/01, effective 9/1/01.]

296-800-31005 Provide an adequate number of exit routes.

[Statutory Authority: RCW 49.17.010, [49.17].040, and [49.17].050 . 01-11-038 (Order 99-36), § 296-800-31005, filed 5/9/01, effective 9/1/01.]

296-800-31010 Make sure the exit routes are large enough.

[Statutory Authority: RCW 49.17.010, [49.17].040, and [49.17].050 . 01-23-060 (Order 01-29), § 296-800-31010, filed 11/20/01, effective 12/1/01; 01-11-038 (Order 99-36), § 296-800-31010, filed 5/9/01, effective 9/1/01.]

296-800-31015 Make sure that exit routes meet their specific design and construction requirements.

[Statutory Authority: RCW 49.17.010, [49.17].040, and [49.17].050 . 01-11-038 (Order 99-36), § 296-800-31015, filed 5/9/01, effective 9/1/01.]

296-800-31020 Make sure that each exit route leads outside.

[Statutory Authority: RCW 49.17.010, [49.17].040, and [49.17].050 . 01-11-038 (Order 99-36), § 296-800-31020, filed 5/9/01, effective 9/1/01.]

296-800-31025 Provide unobstructed access to exit routes.

[Statutory Authority: RCW 49.17.010, [49.17].040, and [49.17].050 . 01-11-038 (Order 99-36), § 296-800-31025, filed 5/9/01, effective 9/1/01.]

296-800-31030 Exit doors must be readily opened from the inside.

[Statutory Authority: RCW 49.17.010, [49.17].040, and [49.17].050 . 01-11-038 (Order 99-36), § 296-800-31030, filed 5/9/01, effective 9/1/01.]

Statutory Authority

296-800-31035 Use side-hinged doors to connect rooms to exit routes.

[Statutory Authority: RCW 49.17.010, [49.17].040, and [49.17].050 . 01-23-060 (Order 01-29), § 296-800-31035, filed 11/20/01, effective 12/1/01; 01-11-038 (Order 99-36), § 296-800-31035, filed 5/9/01, effective 9/1/01.]

296-800-31040 Provide outdoor exit routes that meet these requirements.

[Statutory Authority: RCW 49.17.010, [49.17].040, and [49.17].050 . 01-11-038 (Order 99-36), § 296-800-31040, filed 5/9/01, effective 9/1/01.]

296-800-31045 Minimize danger to employees while they are using emergency exit routes.

[Statutory Authority: RCW 49.17.010, [49.17].040, and [49.17].050 . 01-11-038 (Order 99-36), § 296-800-31045, filed 5/9/01, effective 9/1/01.]

296-800-31050 Marks exits adequately.

[Statutory Authority: RCW 49.17.010, 49.17.040, 49.17.050, and 49.17.060. 03-18-090 (Order 03-15), § 296-800-31050, filed 9/2/03, effective 11/1/03. Statutory Authority: RCW 49.17.010, [49.17].040 , and [49.17].050. 01-11-038 (Order 99-36), § 296-800-31050, filed 5/9/01, effective 9/1/01.]

296-800-31053 Provide adequate lighting for exit routes and signs.

[Statutory Authority: RCW 49.17.010, [49.17].040, and [49.17].050 . 01-11-038 (Order 99-36), § 296-800-31053, filed 5/9/01, effective 9/1/01.]

296-800-31055 Maintain the fire retardant properties of paints or other coatings.

[Statutory Authority: RCW 49.17.010, [49.17].040, and [49.17].050 . 01-11-038 (Order 99-36), § 296-800-31055, filed 5/9/01, effective 9/1/01.]

296-800-31060 Maintain emergency safeguards.

[Statutory Authority: RCW 49.17.010, [49.17].040, and [49.17].050 . 01-11-038 (Order 99-36), § 296-800-31060, filed 5/9/01, effective 9/1/01.]

296-800-31065 Maintain exit routes during construction and repair.

[Statutory Authority: RCW 49.17.010, [49.17].040, and [49.17].050 . 01-11-038 (Order 99-36), § 296-800-31065, filed 5/9/01, effective 9/1/01.]

296-800-31067 Provide doors in freezer or refrigerated rooms that open from the inside.

[Statutory Authority: RCW 49.17.010, [49.17].040, and [49.17].050 . 01-11-038 (Order 99-36), § 296-800-31067, filed 5/9/01, effective 9/1/01.]

296-800-31070 Install and maintain an appropriate employee alarm system.

[Statutory Authority: RCW 49.17.010, [49.17].040, and [49.17].050 . 01-11-038 (Order 99-36), § 296-800-31070, filed 5/9/01, effective 9/1/01.]

296-800-31075 Establish procedures for sounding emergency alarms.

[Statutory Authority: RCW 49.17.010, [49.17].040, and [49.17].050 . 01-11-038 (Order 99-36), § 296-800-31075, filed 5/9/01, effective 9/1/01.]

296-800-31080 Test the employee alarm system.

[Statutory Authority: RCW 49.17.010, [49.17].040, and [49.17].050 . 01-11-038 (Order 99-36), § 296-800-31080, filed 5/9/01, effective 9/1/01.]

296-800-320 Summary.

[Statutory Authority: RCW 49.17.010, [49.17].040, and [49.17].050 . 01-23-060 (Order 01-29), § 296-800-320, filed 11/20/01, effective 12/1/01; 01-11-038 (Order 99-36), § 296-800-320, filed 5/9/01, effective 9/1/01.]

296-800-32005 Report the death, probable death of any employee, or the in-patient hospitalization of 2 or more employees within 8 hours.

[Statutory Authority: RCW 49.17.010, [49.17].040, and [49.17].050 . 01-23-060 (Order 01-29), § 296-800-32005, filed 11/20/01, effective 12/1/01; 01-11-038 (Order 99-36), § 296-800-32005, filed 5/9/01, effective 9/1/01.]

296-800-32010 Make sure that any equipment involved in an accident is not moved.

[Statutory Authority: RCW 49.17.010, [49.17].040, and [49.17].050 . 01-11-038 (Order 99-36), § 296-800-32010, filed 5/9/01, effective 9/1/01.]

296-800-32015 Assign people to assist the department of labor and industries.

[Statutory Authority: RCW 49.17.010, [49.17].040, and [49.17].050 . 01-11-038 (Order 99-36), § 296-800-32015, filed 5/9/01, effective 9/1/01.]

Statutory Authority

296-800-32020 Conduct a preliminary investigation for all serious injuries.

[Statutory Authority: RCW 49.17.010, [49.17].040, and [49.17].050 . 01-11-038 (Order 99-36), § 296-800-32020, filed 5/9/01, effective 9/1/01.]

296-800-32025 Document the investigation findings.

[Statutory Authority: RCW 49.17.010, [49.17].040, and [49.17].050 . 02-16-047 (Order 02-02), § 296-800-32025, filed 8/1/02, effective 10/1/02; 01-11-038 (Order 99-36), § 296-800-32025, filed 5/9/01, effective 9/1/01.]

296-800-330 Releasing accident investigation reports.

[Statutory Authority: RCW 49.17.010, [49.17].040, and [49.17].050 . 01-11-038 (Order 99-36), § 296-800-330, filed 5/9/01, effective 9/1/01.]

296-800-340 Protecting the identity of the source of confidential information.

[Statutory Authority: RCW 49.17.010, [49.17].040, and [49.17].050 . 01-11-038 (Order 99-36), § 296-800-340, filed 5/9/01, effective 9/1/01.]

296-800-350 Your responsibility:

[Statutory Authority: RCW 49.17.010, 49.17.040, 49.17.050, and 49.17.060. 03-18-090 (Order 03-15), § 296-800-350, filed 9/2/03, effective 11/1/03. Statutory Authority: RCW 49.17.010, [49.17].040 , and [49.17].050. 01-23-060 (Order 01-29), § 296-800-350, filed 11/20/01, effective 12/1/01; 01-11-038 (Order 99-36), § 296-800-350, filed 5/9/01, effective 9/1/01.]

296-800-35002 Types of workplace inspections.

[Statutory Authority: RCW 49.17.010, [49.17].040, and [49.17].050 . 01-11-038 (Order 99-36), § 296-800-35002, filed 5/9/01, effective 9/1/01.]

296-800-35004 Scheduling inspections.

[Statutory Authority: RCW 49.17.010, [49.17].040, and [49.17].050 . 01-11-038 (Order 99-36), § 296-800-35004, filed 5/9/01, effective 9/1/01.]

296-800-35006 Inspection techniques.

[Statutory Authority: RCW 49.17.010, [49.17].040, and [49.17].050 . 01-11-038 (Order 99-36), § 296-800-35006, filed 5/9/01, effective 9/1/01.]

296-800-35008 Response to complaints submitted by employees or their representatives.

[Statutory Authority: RCW 49.17.010, [49.17].040, and [49.17].050 . 01-11-038 (Order 99-36), § 296-800-35008, filed 5/9/01, effective 9/1/01.]

296-800-35010 Citations mailed after an inspection.

[Statutory Authority: RCW 49.17.010, [49.17].040, and [49.17].050 . 01-23-060 (Order 01-29), § 296-800-35010, filed 11/20/01, effective 12/1/01; 01-11-038 (Order 99-36), § 296-800-35010, filed 5/9/01, effective 9/1/01.]

296-800-35012 Employees (or their representatives) can request a citation and notice.

[Statutory Authority: RCW 49.17.010, [49.17].040, and [49.17].050 . 01-23-060 (Order 01-29), § 296-800-35012, filed 11/20/01, effective 12/1/01; 01-11-038 (Order 99-36), § 296-800-35012, filed 5/9/01, effective 9/1/01.]

296-800-35016 Posting a citation and notice and employee complaint information.

[Statutory Authority: RCW 49.17.010, [49.17].040, and [49.17].050 . 01-11-038 (Order 99-36), § 296-800-35016, filed 5/9/01, effective 9/1/01.]

296-800-35018 Reasons to assess civil penalties.

[Statutory Authority: RCW 49.17.010, [49.17].040, and [49.17].050 . 01-11-038 (Order 99-36), § 296-800-35018, filed 5/9/01, effective 9/1/01.]

296-800-35020 Minimum penalties.

[Statutory Authority: RCW 49.17.010, [49.17].040, and [49.17].050 . 01-11-038 (Order 99-36), § 296-800-35020, filed 5/9/01, effective 9/1/01.]

296-800-35022 Base penalty calculations—Severity and probability.

[Statutory Authority: RCW 49.17.010, [49.17].040, and [49.17].050 . 01-11-038 (Order 99-36), § 296-800-35022, filed 5/9/01, effective 9/1/01.]

296-800-35024 Severity rate determination.

[Statutory Authority: RCW 49.17.010, [49.17].040, and [49.17].050 . 01-11-038 (Order 99-36), § 296-800-35024, filed 5/9/01, effective 9/1/01.]

Statutory Authority

296-800-35026 Probability rate determination.

[Statutory Authority: RCW 49.17.010, [49.17].040, and [49.17].050 . 01-23-060 (Order 01-29), § 296-800-35026, filed 11/20/01, effective 12/1/01; 01-11-038 (Order 99-36), § 296-800-35026, filed 5/9/01, effective 9/1/01.]

296-800-35028 Determining the gravity of a violation.

[Statutory Authority: RCW 49.17.010, [49.17].040, and [49.17].050 . 01-11-038 (Order 99-36), § 296-800-35028, filed 5/9/01, effective 9/1/01.]

296-800-35030 Base penalty adjustments.

[Statutory Authority: RCW 49.17.010, [49.17].040, and [49.17].050 . 02-16-047 (Order 02-02), § 296-800-35030, filed 8/1/02, effective 10/1/02; 01-23-060 (Order 01-29), § 296-800-35030, filed 11/20/01, effective 12/1/01; 01-11-038 (Order 99-36), § 296-800-35030, filed 5/9/01, effective 9/1/01.]

296-800-35032 Types of base penalty. Employers good faith.

[Statutory Authority: RCW 49.17.010, [49.17].040, and [49.17].050 . 01-11-038 (Order 99-36), § 296-800-35032, filed 5/9/01, effective 9/1/01.]

296-800-35038 Maximum base penalty amount.

[Statutory Authority: RCW 49.17.010, 49.17.040, 49.17.050, and 49.17.060. 03-18-090 (Order 03-15), § 296-800-35038, filed 9/2/03, effective 11/1/03. Statutory Authority: RCW 49.17.010, [49.17].040 , and [49.17].050. 01-11-038 (Order 99-36), § 296-800-35038, filed 5/9/01, effective 9/1/01.]

296-800-35040 Reasons for increasing civil penalty amounts.

[Statutory Authority: RCW 49.17.010, 49.17.040, 49.17.050, and 49.17.060. 03-18-090 (Order 03-15), § 296-800-35040, filed 9/2/03, effective 11/1/03. Statutory Authority: RCW 49.17.010, [49.17].040 , and [49.17].050. 02-16-047 (Order 02-02), § 296-800-35040, filed 8/1/02, effective 10/1/02; 01-23-060 (Order 01-29), § 296-800-35040, filed 11/20/01, effective 12/1/01; 01-11-038 (Order 99-36), § 296-800-35040, filed 5/9/01, effective 9/1/01.]

296-800-35042 Employers must certify that violations have been abated.

[Statutory Authority: RCW 49.17.010, [49.17].040, and [49.17].050 . 01-11-038 (Order 99-36), § 296-800-35042, filed 5/9/01, effective 9/1/01.]

296-800-35044 For willful, repeated, or serious violations, submit additional documentation.

[Statutory Authority: RCW 49.17.010, [49.17].040, and [49.17].050 . 01-11-038 (Order 99-36), § 296-800-35044, filed 5/9/01, effective 9/1/01.]

296-800-35046 Submitting correction action plans.

[Statutory Authority: RCW 49.17.010, [49.17].040, and [49.17].050 . 01-11-038 (Order 99-36), § 296-800-35046, filed 5/9/01, effective 9/1/01.]

296-800-35048 Submit progress reports to the department when required.

[Statutory Authority: RCW 49.17.010, [49.17].040, and [49.17].050 . 01-23-060 (Order 01-29), § 296-800-35048, filed 11/20/01, effective 12/1/01; 01-11-038 (Order 99-36), § 296-800-35048, filed 5/9/01, effective 9/1/01.]

296-800-35049 WISHA determines the date by which abatement documents must be submitted.

[Statutory Authority: RCW 49.17.010, [49.17].040, and [49.17].050 . 01-11-038 (Order 99-36), § 296-800-35049, filed 5/9/01, effective 9/1/01.]

296-800-35050 Inform affected employees and their representatives of abatement actions you have taken.

[Statutory Authority: RCW 49.17.010, [49.17].040, and [49.17].050 . 01-23-060 (Order 01-29), § 296-800-35050, filed 11/20/01, effective 12/1/01; 01-11-038 (Order 99-36), § 296-800-35050, filed 5/9/01, effective 9/1/01.]

296-800-35052 Tag cited moveable equipment to warn employees of a hazard.

[Statutory Authority: RCW 49.17.010, [49.17].040, and [49.17].050 . 01-11-038 (Order 99-36), § 296-800-35052, filed 5/9/01, effective 9/1/01.]

296-800-35056 You can request more time to comply.

[Statutory Authority: RCW 49.17.010, [49.17].040, and [49.17].050 . 02-16-047 (Order 02-02), § 296-800-35056, filed 8/1/02, effective 10/1/02; 01-11-038 (Order 99-36), § 296-800-35056, filed 5/9/01, effective 9/1/01.]

Statutory Authority

296-800-35062 WISHA's response to your request for more time.

[Statutory Authority: RCW 49.17.010, 49.17.040, 49.17.050, and 49.17.060. 03-18-090 (Order 03-15), § 296-800-35062, filed 9/2/03, effective 11/1/03. Statutory Authority: RCW 49.17.010, [49.17].040 , and [49.17].050. 01-23-060 (Order 01-29), § 296-800-35062, filed 11/20/01, effective 12/1/01; 01-11-038 (Order 99-36), § 296-800-35062, filed 5/9/01, effective 9/1/01.]

296-800-35063 Post the department's response.

[Statutory Authority: RCW 49.17.010, [49.17].040, and [49.17].050 . 01-11-038 (Order 99-36), § 296-800-35063, filed 5/9/01, effective 9/1/01.]

296-800-35064 A hearing can be requested about the department's response.

[Statutory Authority: RCW 49.17.010, 49.17.040, 49.17.050, and 49.17.060. 03-18-090 (Order 03-15), § 296-800-35064, filed 9/2/03, effective 11/1/03. Statutory Authority: RCW 49.17.010, [49.17].040 , and [49.17].050. 01-23-060 (Order 01-29), § 296-800-35064, filed 11/20/01, effective 12/1/01; 01-11-038 (Order 99-36), § 296-800-35064, filed 5/9/01, effective 9/1/01.]

296-800-35065 Post the department's hearing notice.

[Statutory Authority: RCW 49.17.010, [49.17].040, and [49.17].050 . 01-11-038 (Order 99-36), § 296-800-35065, filed 5/9/01, effective 9/1/01.]

296-800-35066 Hearing procedures.

[Statutory Authority: RCW 49.17.010, [49.17].040, and [49.17].050 . 01-23-060 (Order 01-29), § 296-800-35066, filed 11/20/01, effective 12/1/01; 01-11-038 (Order 99-36), § 296-800-35066, filed 5/9/01, effective 9/1/01.]

296-800-35072 Post the hearing decision.

[Statutory Authority: RCW 49.17.010, [49.17].040, and [49.17].050 . 01-11-038 (Order 99-36), § 296-800-35072, filed 5/9/01, effective 9/1/01.]

296-800-35076 Employers and employees can request an appeal of a citation and notice.

[Statutory Authority: RCW 49.17.010, [49.17].040, and [49.17].050 . 02-16-047 (Order 02-02), § 296-800-35076, filed 8/1/02, effective 10/1/02; 01-11-038 (Order 99-36), § 296-800-35076, filed 5/9/01, effective 9/1/01.]

296-800-35078 Await the department's response to your appeal request.

[Statutory Authority: RCW 49.17.010, [49.17].040, and [49.17].050 . 01-11-038 (Order 99-36), § 296-800-35078, filed 5/9/01, effective 9/1/01.]

296-800-35080 Department actions when reassuming jurisdiction over an appeal.

[Statutory Authority: RCW 49.17.010, [49.17].040, and [49.17].050 . 01-11-038 (Order 99-36), § 296-800-35080, filed 5/9/01, effective 9/1/01.]

296-800-35082 Appealing a corrective notice.

[Statutory Authority: RCW 49.17.010, [49.17].040, and [49.17].050 . 01-11-038 (Order 99-36), § 296-800-35082, filed 5/9/01, effective 9/1/01.]

296-800-35084 Notify employees.

[Statutory Authority: RCW 49.17.010, [49.17].040, and [49.17].050 . 01-23-060 (Order 01-29), § 296-800-35084, filed 11/20/01, effective 12/1/01; 01-11-038 (Order 99-36), § 296-800-35084, filed 5/9/01, effective 9/1/01.]

296-800-360 Rule.

[Statutory Authority: RCW 49.17.010, [49.17].040, and [49.17].050 . 01-11-038 (Order 99-36), § 296-800-360, filed 5/9/01, effective 9/1/01.]

296-800-36005 Comply with standards national organizations of federal agencies when referenced in WISHA rules.

[Statutory Authority: RCW 49.17.010, [49.17].040, and [49.17].050 . 01-11-038 (Order 99-36), § 296-800-36005, filed 5/9/01, effective 9/1/01.]

296-800-370 Definitions.

[Statutory Authority: RCW 49.17.010, 49.17.040, 49.17.050, and 49.17.060. 03-18-090 (Order 03-15), § 296-800-370, filed 9/2/03, effective 11/1/03. Statutory Authority: RCW 49.17.010, [49.17].040 , and [49.17].050. 02-16-047 (Order 02-02), § 296-800-370, filed 8/1/02, effective 10/1/02; 01-23-060 (Order 01-29), § 296-800-370, filed 11/20/01, effective 12/1/01; 01-11-038 (Order 99-36), § 296-800-370, filed 5/9/01, effective 9/1/01.]

Statutory Authority

Safety & Health Core Rules - Chapter 296-800 WAC

If you would like to receive paper updates to Safety & Health Core Rules, chapter 296-800 WAC, you **must** return this card.

To receive electronic notification for all the Safety & Health updates please sign up on the listserv: http://www.lni.wa.gov/wisha

Name Phone

Company

Mailing address

City

Comments

F414-059-000

place postcard stamp here

DEPARTMENT OF LABOR AND INDUSTRIES
WISHA SERVICES DIVISION
STANDARDS AND INFORMATION
PO BOX 44620
OLYMPIA WA 98504-4620

Department of Labor and Industries
WISHA Services Division
Standards and Information
PO Box 44620
Olympia WA 98504-4620